TÜBİTAK

UME

TÜBİTAK Gebze Yerleşkesi, 41470, Turkey

EMPIR

EURAMET

The EMPIR initiative is co-funded by the European Union's Horizon 2020 research and innovation programme and the EMPIR Participating States

EMPIR 15RPT01
RFMICROWAVE

National Institute of Standards (NIS) Egypt

Training and Workshop 4-6 March 2019

Rigorous Analysis of Complex Reflection Coefficient of Microwave Source

Abdel Rahman Mohamad Sallam

Prof. Emirates

IEEE-emember

National Institute of Standards (NIS) Egypt

sallam2050@gmail.com

Index

x Title

xi Acknowledgement

I Concept of reflection coefficient

II Complex quantity

III-1 Reflection parameters

III-2 Reflection extractors

IV Reflection coefficient measuring techniques

IV-1 Using Step attenuator measurement technique

IV-2 Using mismatched power meters with 2-port phase shifters

IV-3 Effective source reflection coefficient method

IV-4 R&S method for determination of equivalent VRC

IV-5 Virtual Ground Technique

IV-5.1 AOC and POC technique (active and passive open circuit)

IV-5.2 Example

V Rigorous Analysis of Complex VRC
V-1 Introduction
V-1.1 Directional devices
V-1.2 Reflection approximation
V-2 Theoretical treatment
V-2.1 Example
V-2.2 Instrumentation
V-2.3 Uncertainty approach
V-2.4 Results
VI References

Acknowledgement

First of all, I would like to thank all UME staff especially Dr. Murat Celep and Dr. Erkan Danaci for not only their generous invitation but also for long time tracking NIS situation concerning technology transfer, hardware, and software enhancement.

UME supplied NIS with the microcalorimeter system which becomes Egypt national primary standard for microwave power.

UME-made microcalorimeter transfers the effective efficiency which is the NIS traceiability.

I- Concept of reflection coefficient

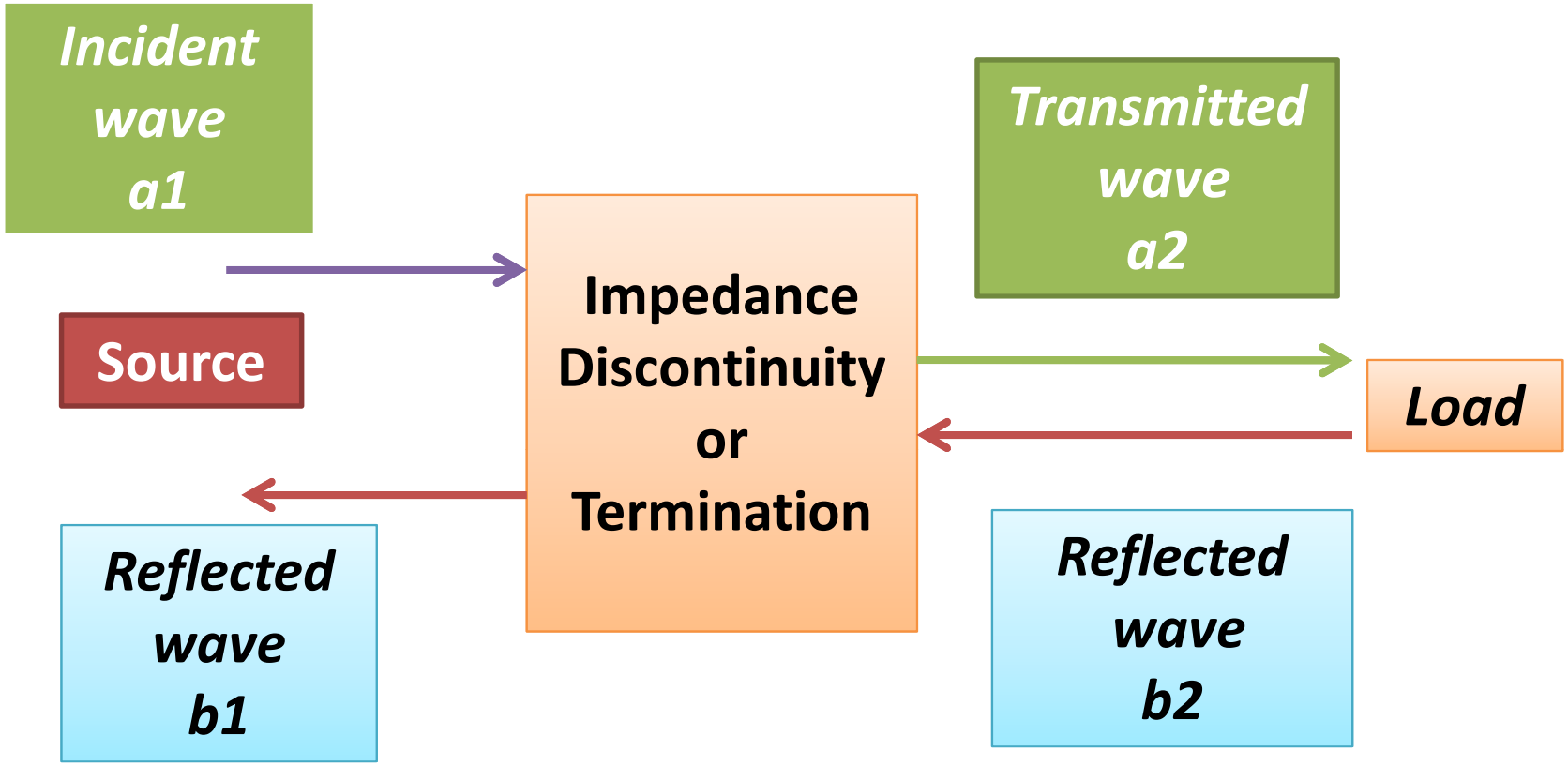

Figure 1 Incident, reflected, and transmitted waves

The concept of reflection coefficient is applied to the case of

(a) sinusoidal time variation,

(b) single frequency,

(c) single propagating mode,

(d) uniform path or waveguide having a termination or discontinuity which causes reflection, and

(e) incident and reflected waves traveling the same path in opposite directions.

Scattering coefficient

The ratio of the amplitude of a reflected wave in one mode or path to the amplitude of an incident wave in another mode or path. These ratios are called scattering coefficients rather than reflection coefficients. The concept of reflection coefficients is thus seen to be a special case of the concept of the scattering coefficient.

II-Complex quantity → Real & imaginary (prefered for uncertainty estimation)

↓

Amplitude & phase —prefered for→ Amplitude indicates loss (or signal absorbed)

Phase indicates electrical path length

Phase is not prefred for uncertainty because of its cyclic nature

[21] [24-25]

III-1

Reflection Parameters

Reflection Coefficient [S11] $= \Gamma = \frac{V_{reflected}}{V_{incident}} = \rho \angle \Phi = \frac{Z_L - Z_o}{Z_L + Z_o}$

Return loss = $-20 \log(\rho)$, $\rho = |\Gamma|$

Colloquially: Return loss = $20 \log(\rho)$,

No reflection
(ZL = Zo)

Voltage Standing Wave Ratio

VSWR $= \frac{V_{max}}{V_{min}} = \frac{1 + \rho}{1 - \rho}$

Full reflection
(ZL = open, short)

Figure 2 Reflection parameters

III-2 Reflection Extractors

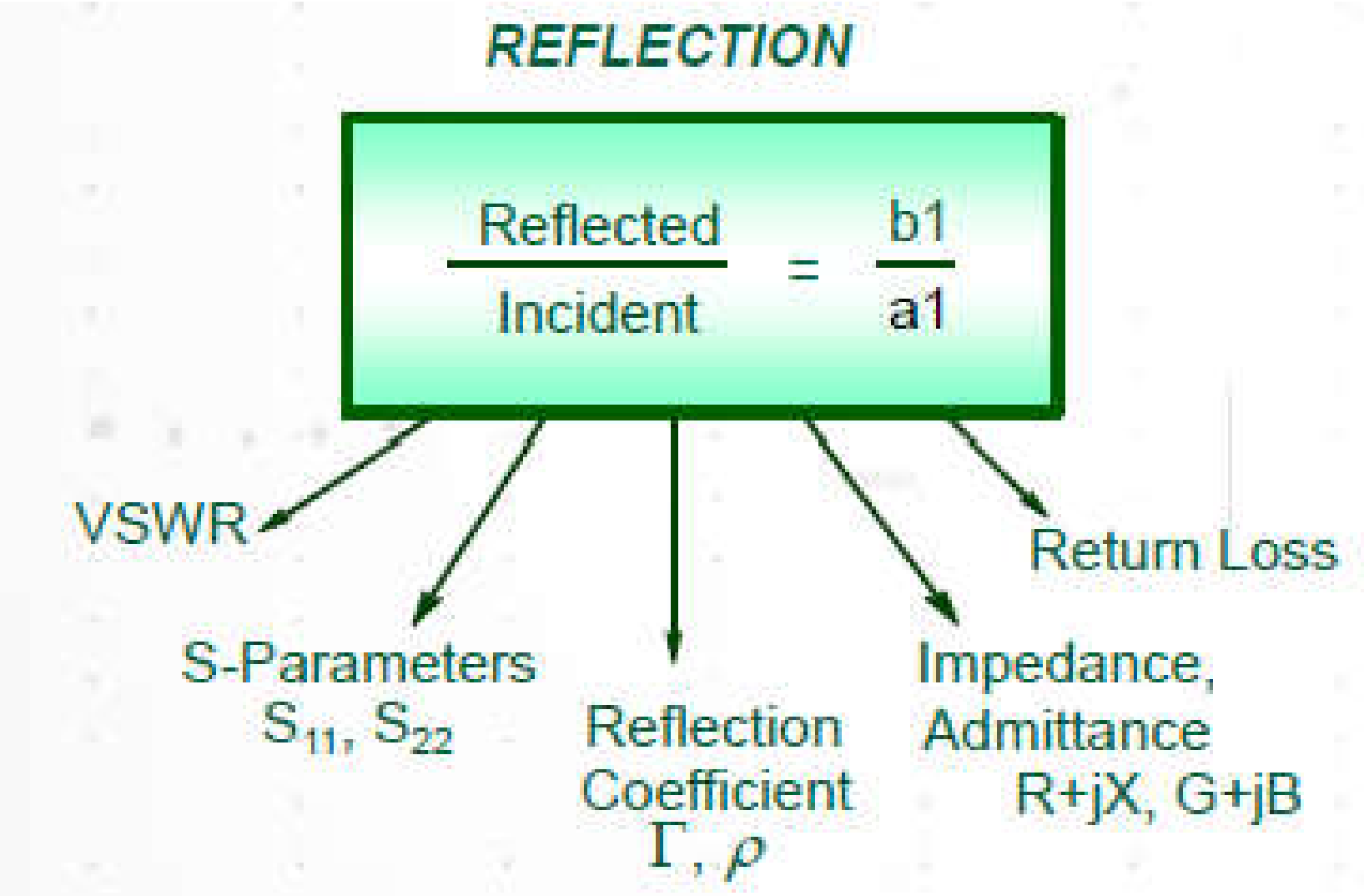

Figure 3 Reflection extractors

The Need for Both Magnitude and Phase

1. Complete characterization of linear networks

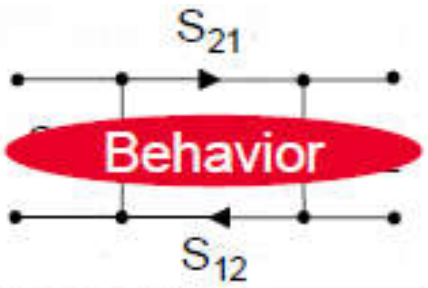

2. Complex impedance needed to design matching circuits

3. Complex values needed for device modeling

Figure 4 Need for both magnitude and phase

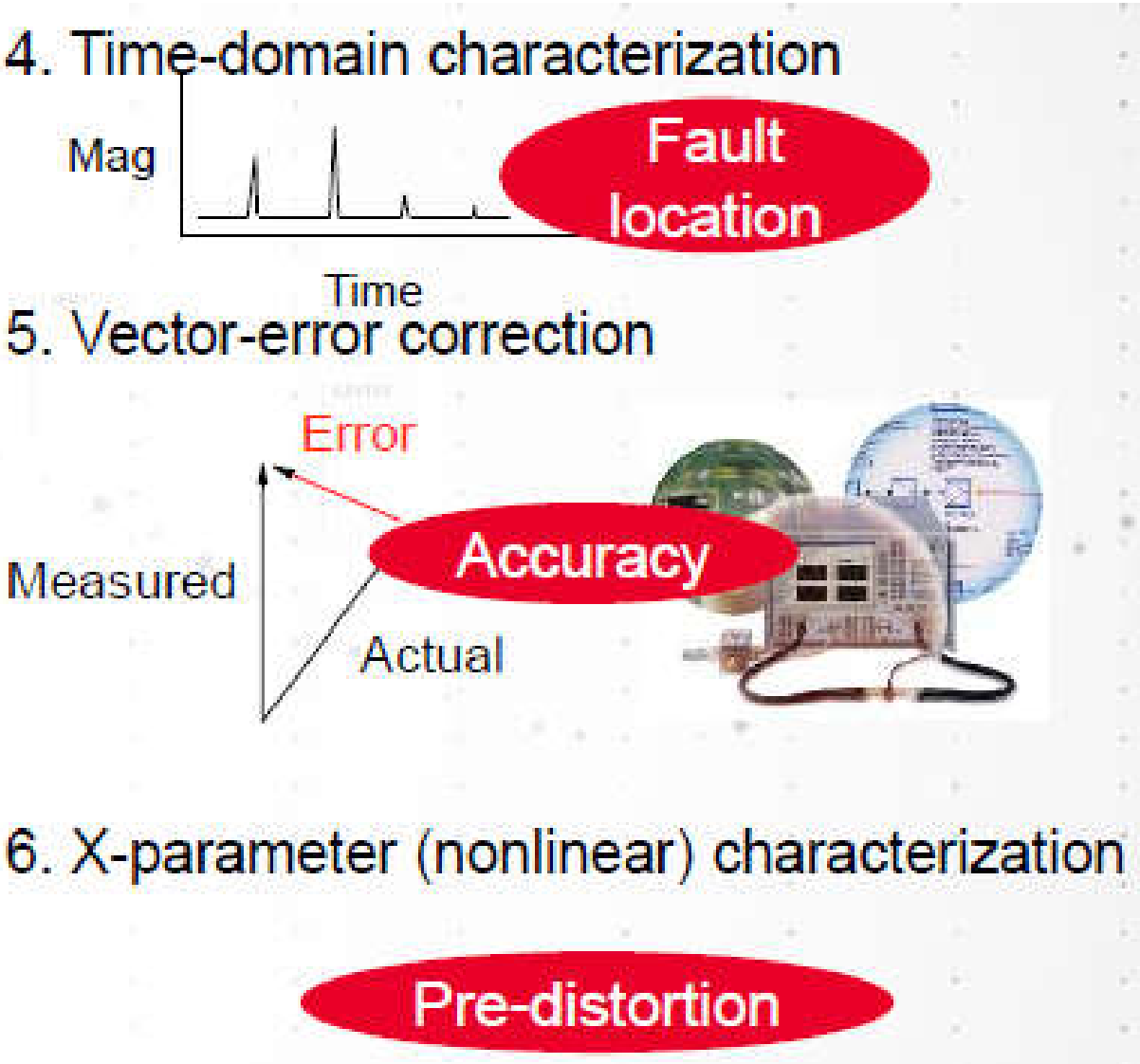

Figure 4 Continue

IV- Reflection coefficient measuring techniques

IV-1 Using Step attenuator measurement technique

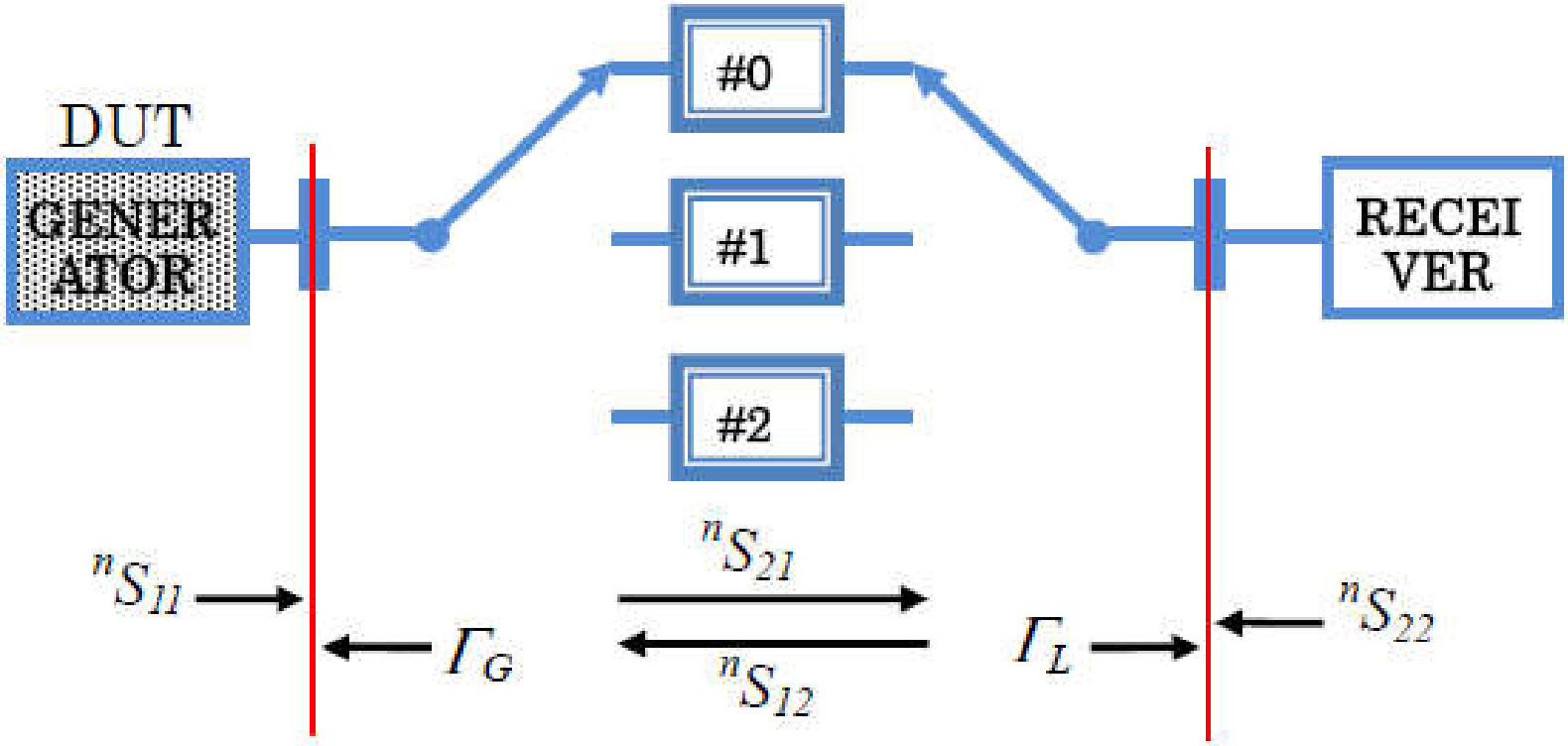

[22]

The substitution loss that occurs is measured, it *is expressed in decibels as,*

$$L_{01} = -10\log_{10}\frac{\left|S_{21}^{1}\right|^{2}\left|(1-S_{11}^{0}\Gamma_{G})(1-S_{22}^{0}\Gamma_{L})-S_{21}^{0}S_{12}^{0}\Gamma_{G}\Gamma_{L}\right|^{2}}{\left|S_{21}^{0}\right|^{2}\left|(1-S_{11}^{1}\Gamma_{G})(1-S_{22}^{1}\Gamma_{L})-S_{21}^{1}S_{12}^{1}\Gamma_{G}\Gamma_{L}\right|^{2}}$$

When the attenuation values of #0 and #1 are equal to or greater than 20 dB and $|S_{ii}^{n}\Gamma_{G,L}|$ is equal to or less than 0.01, L_{01} is approximated expressed as ,

$$L_{01} = L_{01}^{Match} - 8.686\,\mathrm{Re}\{(S_{11}^{1} - S_{11}^{0})\Gamma_{G}\}.$$

$$L_{01}^{Match} = -10\log\left|\frac{S_{21}^{1}}{S_{21}^{0}}\right|^{2} - 8.686\,\mathrm{Re}\{(S_{22}^{1} - S_{22}^{0})\Gamma_{L}\}$$

is a L_{01} measurement with source impedance matched (Γ_G=0). Similarly, when the step attenuator is switched from #0 position to #2 position, the substitution loss L_{02} that occurs is measured as follows.

$$L_{02} = L_{02}^{Match} - 8.686\,\mathrm{Re}\{(S_{11}^{2} - S_{11}^{0})\Gamma_G\}.$$

Where

$$L_{02}^{Match} = -10\log\left|\frac{S_{21}^{2}}{S_{21}^{0}}\right|^{2} - 8.686\,\mathrm{Re}\{(S_{22}^{2} - S_{22}^{0})\Gamma_L\}$$

$$\Gamma_G^R = -\frac{(L_{01} - L_{01}^{Match})(S_{11}^{0I} - S_{11}^{2I}) - (L_{02} - L_{02}^{Match})(S_{11}^{0I} - S_{11}^{1I})}{8.686\{(S_{11}^{1R} - S_{11}^{0R})(S_{11}^{0I} - S_{11}^{2I}) - (S_{11}^{2R} - S_{11}^{0R})(S_{11}^{0I} - S_{11}^{1I})\}}$$

$$\Gamma_G^I = -\frac{(L_{02} - L_{02}^{Match})(S_{11}^{1R} - S_{11}^{0R}) - (L_{01} - L_{01}^{Match})(S_{11}^{2R} - S_{11}^{0R})}{8.686\{(S_{11}^{1R} - S_{11}^{0R})(S_{11}^{0I} - S_{11}^{2I}) - (S_{11}^{2R} - S_{11}^{0R})(S_{11}^{0I} - S_{11}^{1I})\}}$$

IV-2 Using mismatched power meters with 2-port phase shifters

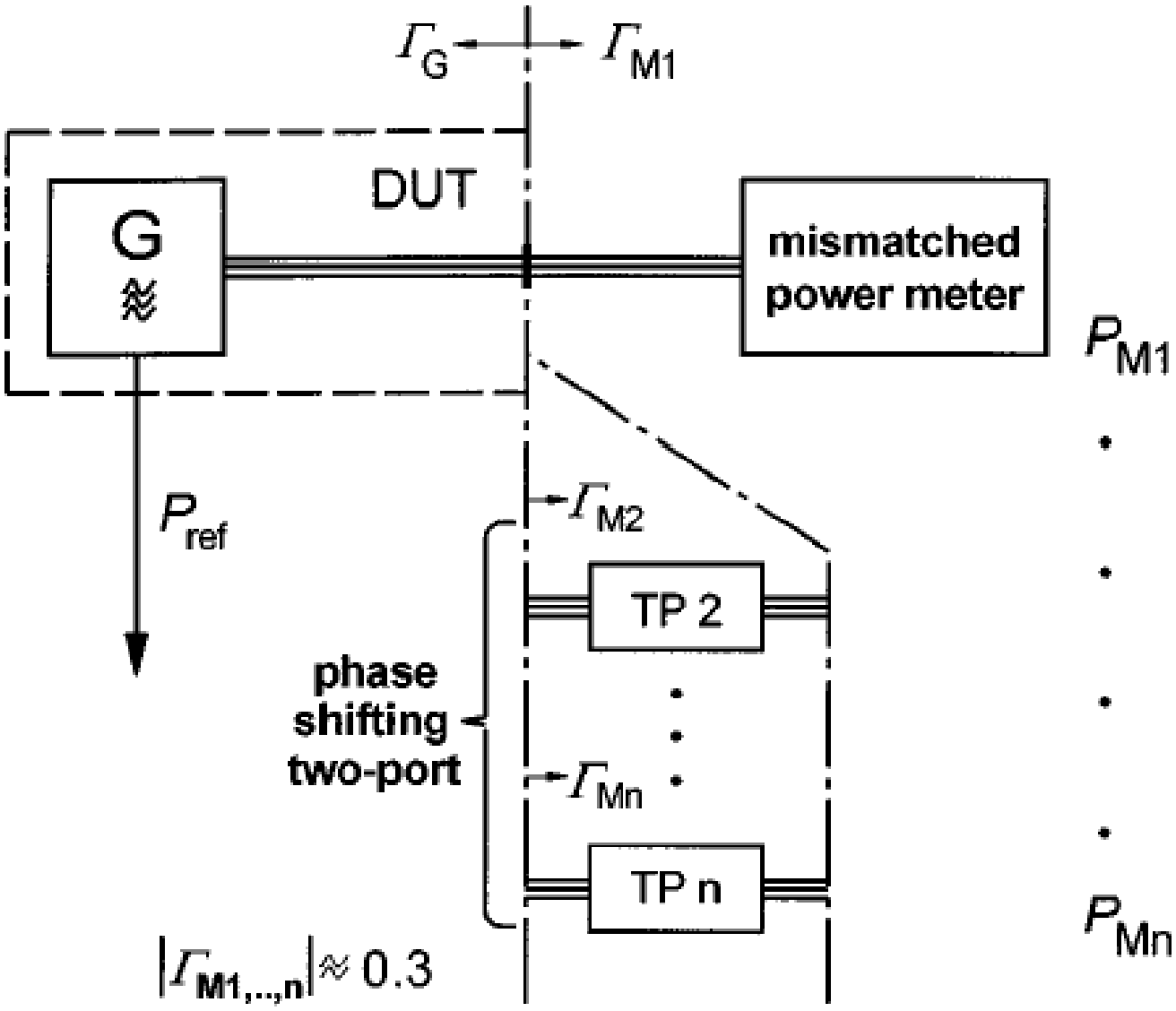

[23]

IV-3 Effective source reflection coefficient method

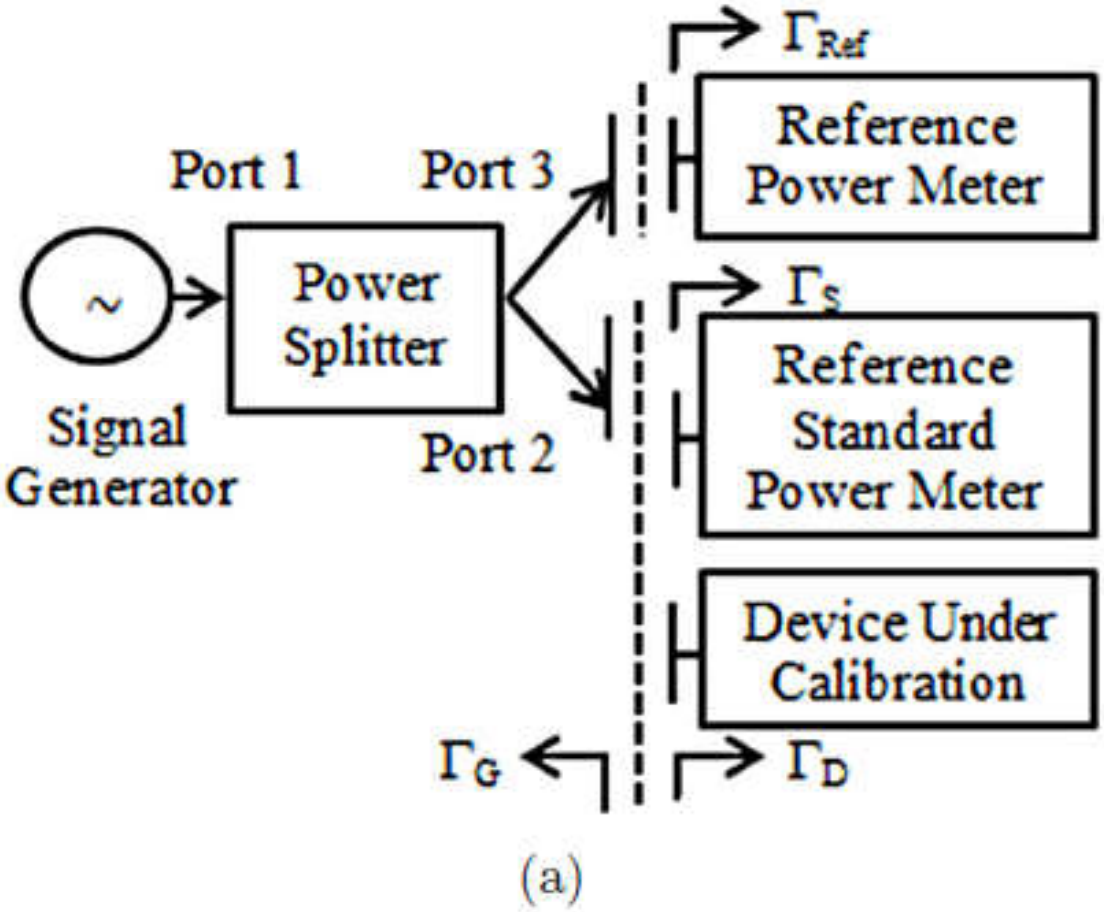

Figure 5-a Coaxial splitter based power measurement

1- Juroshek method is implemented in conjunction with VNA for measurement of S parameters [1].

2-Significant measurement error can occur due to the splitter directivity.

3- there are errors due to reflections occur between splitter three ports and devices connected to them.

4- A lot of time would be required for the calibration of a power splitter.

5- The network analyzer has to be configured and calibrated to determine the S-parameters of non-insertable DUTs [2].

6- In the microwave range, the adapter removal calibration of the vector network analyzer is thus indispensable.

7- Unfortunately, this method is very time-consuming and requires twice the effort of a full two-port calibration.

8- The measurement uncertainty is slightly higher than that obtained with a calibration for insertable DUTs.

9- The S-parameters must be measured via a measurement cable. The measurement cables largely contribute to measurement uncertainty since the position of the cables largely differs from the position used during the calibration of the vector network analyzer.

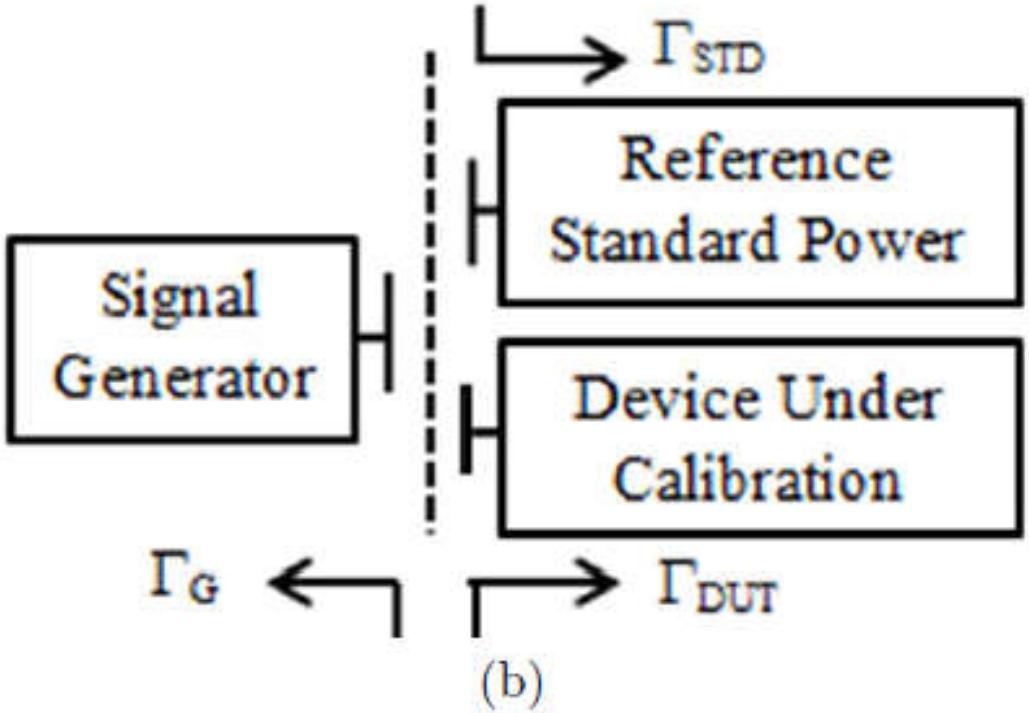

Figure 5-b Effective source mismatch

$$K_{b(DUC)} = K_{b(STD)} \frac{P_{DUC}/P_{ref}}{P_{STD}/P_{ref}} MF$$

where,

$K_{b(STD)}$	Calibration factor of the standard
P_{DUC}	Power measured by device under calibration
P_{STD}	Power measured by the standard
P_{ref}	Reference power measured
MF	Mismatch Factor

where, Mismatch factor is given by:

$$MF = \frac{[1-\Gamma_D\Gamma_G]^2}{[1-\Gamma_S\Gamma_G]^2}$$

where, Γ_G, Γ_S, and Γ_D are reflection coefficient of signal generator, reference standard and device under calibration respectively.

$$\Gamma_G = S_{22} - \frac{S_{12}S_{23}}{S_{13}}$$

where, S_{ij} are complex scattering parameters of a three port resistive power splitter.

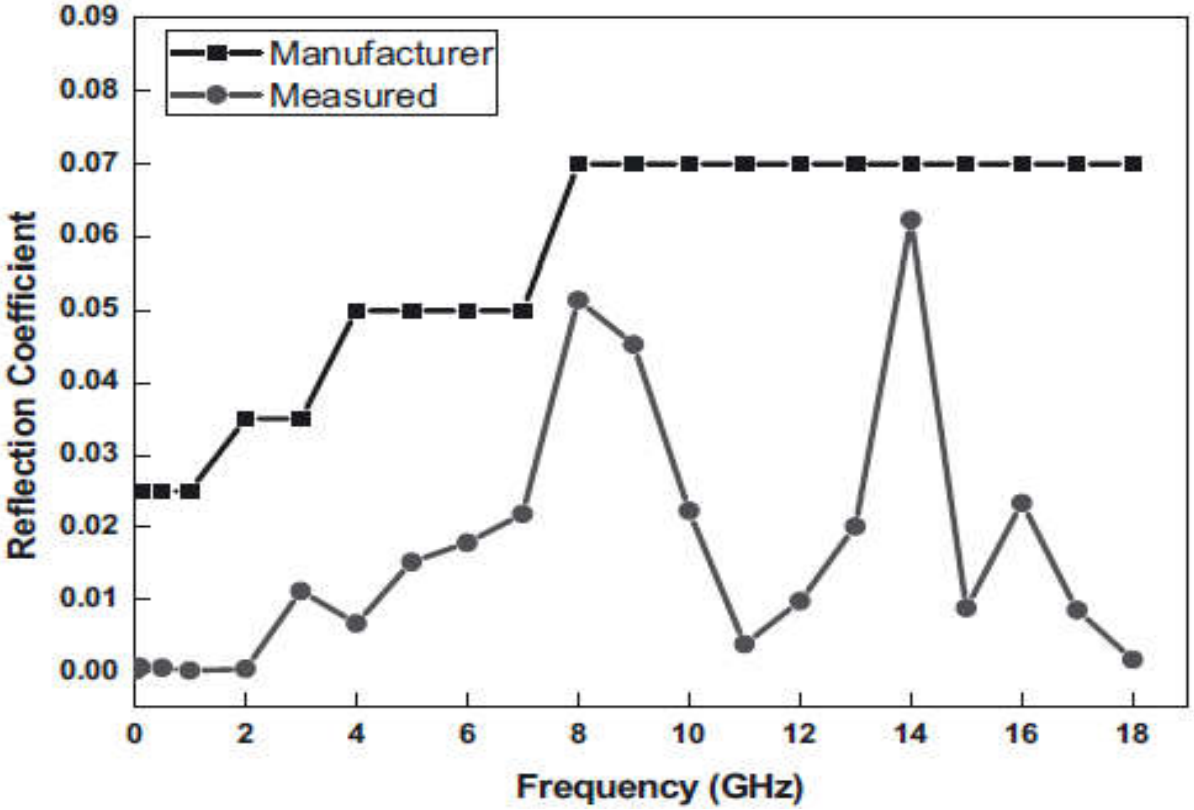

Figure 6 Equivalent reflection coefficient

IV-4 R&S method for determination of equivalent VRC

This method is based on a swept power measurement by using an air line, where evaluation is performed by means of digital signal processing methods [3].

IV-5 Virtual Ground Technique

IV-5.1 AOC and POC technique (active and passive open circuit)

Direct measurement of equivalent reflection coefficient at port 2 or 3 by applying a virtual ground at the junction point of the two resistors by passive or active means on port 1 (AOC and POC technique)[4].

[3-4] [28]

The <u>POC method</u> (Passive Open Circuit) allows measurements only at discrete frequencies. The attainable measurement accuracy depends on the attenuation between node and port 1. Therefore, accurate measurements are only possible for the lower GHz range.

The <u>AOC method</u> (Active Open Circuit) prevents the influence of attenuation by applying a correction signal at port 1. Therefore, the method is very accurate. However, this method is difficult to automate since the phase shifter and the attenuator have to be set individually for each frequency.

IV-5.2 Example:

The equivalent reflection coefficient of port 2 of a power splitter (connectors 3 x 2.92 mm female)

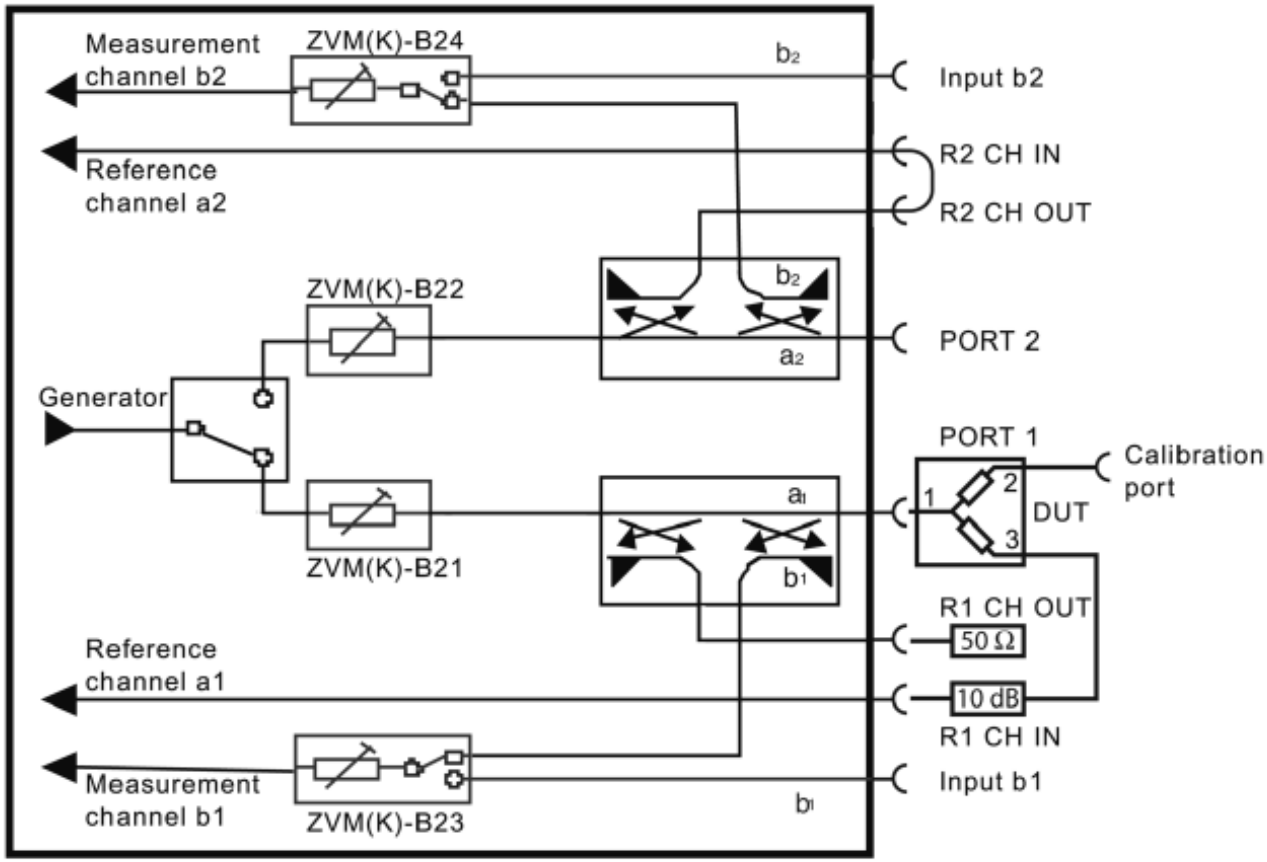

Figure 7 R&S technique for measuring equivalent reflection coefficient

V- Rigorous Analysis of Complex VRC

V-1 Introduction :

Methods of measuring complex VRC is divided into:

V-1.1 Directional devices (couplers, bridges, or splitters) to avoid an explicit expression of source complex reflection coefficient, instead an equivalent reflection coefficient is configured as a function of directional devices scattering parameters [5-12].

V-1.2 Reflection approximation

There are also many papers which approximates reflection expression depending on real fact that the amplitude of most sources and sensors are small and can be neglected especially for their multiplication or they receive high power exponent [13- 16].

V-2 Theoretical treatment

Recall of Eqn. (11.2) of Ref. [17- Ch. 11] which expresses the ratio of absorbed power indicated by two power meters alternatively connected to a microwave source as shown in Fig. 8

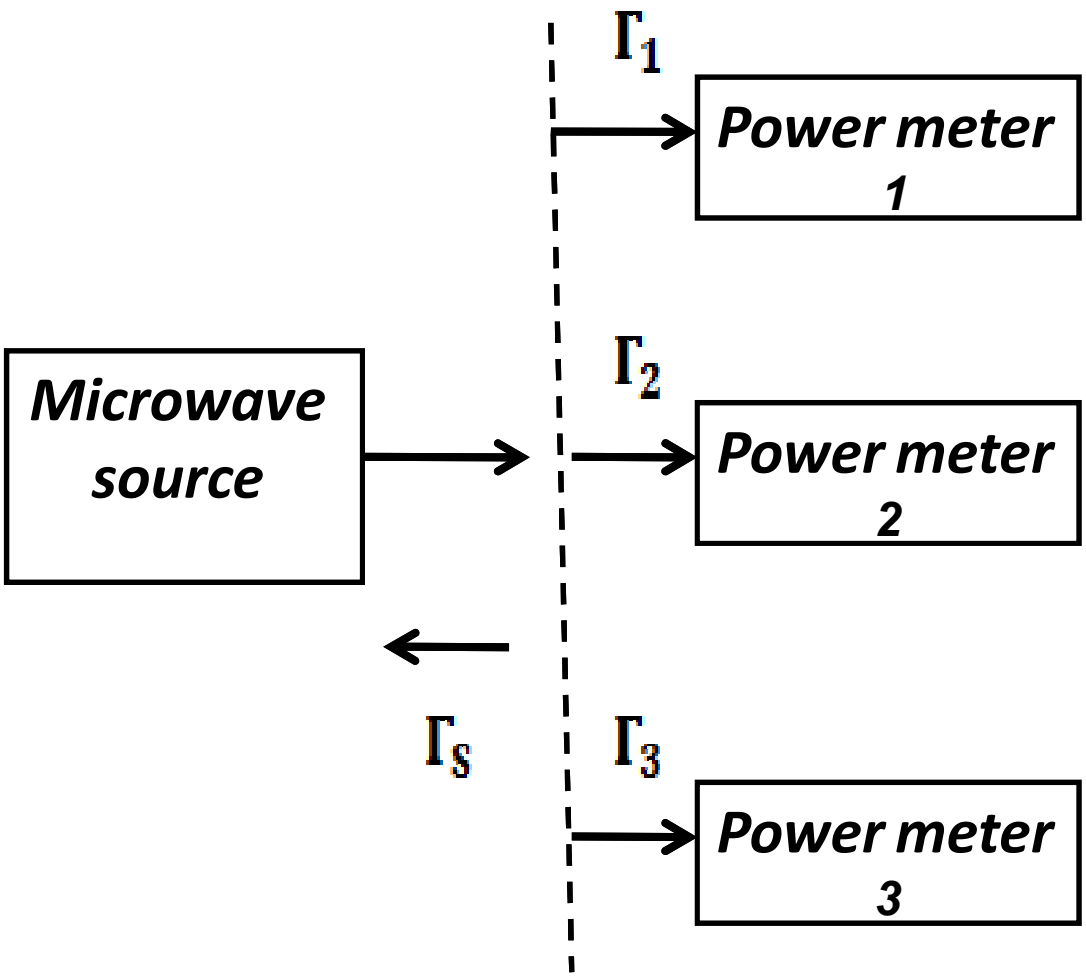

Figure 8 Three power meters are connected alternatively to microwave source.

$$\frac{P_2}{P_1} = \frac{1 - |\Gamma_2|^2}{1 - |\Gamma_1|^2} \frac{|1 - \Gamma_S \Gamma_1|^2}{|1 - \Gamma_S \Gamma_2|^2} \qquad (1)$$

The power ratio in Eqn. (1) is referred as the "comparison loss" [27].

here,

P_i power absorbed by power meter number *i*

Γ_i complex reflection coefficients of power meters (*i=1-2*)

Γ_S Microwave source complex reflection coefficient (figure 8).

Repeating Eqn. (1) for power meter number 3 with power meter number 1 gives:

$$\frac{P_3}{P_1} = \frac{1 - |\Gamma_3|^2}{1 - |\Gamma_1|^2} \frac{|1 - \Gamma_S \Gamma_1|^2}{|1 - \Gamma_S \Gamma_3|^2} \qquad \textbf{(2)}$$

Reconfiguration of previous terms leads to equation (3)

$$M_1 = \frac{|1 - \Gamma_S \Gamma_1|^2}{|1 - \Gamma_S \Gamma_2|^2} = \frac{P_2}{P_1} \frac{1 - |\Gamma_1|^2}{1 - |\Gamma_2|^2} \qquad \textbf{(3.1)}$$

$$M_2 = \frac{|1 - \Gamma_S \Gamma_1|^2}{|1 - \Gamma_S \Gamma_3|^2} = \frac{P_3}{P_1} \frac{1 - |\Gamma_1|^2}{1 - |\Gamma_3|^2} \qquad \textbf{(3.2)}$$

Assume that:

$$\Gamma_1 = Ae^{j\phi_1} \quad (3.3)$$

$$\Gamma_2 = Be^{j\phi_2} \quad (3.4)$$

$$\Gamma_3 = De^{j\phi_3} \quad (3.5)$$

$$\Gamma_S = Ce^{j\phi_S} \quad (3.6)$$

here,

$$M_i, A, B, C, D, \phi_j, and \phi_S$$

represent mismatch terms (*i=1-2*), amplitudes of three sensors reflection coefficients, phases of three power sensors reflection coefficients (*j=1-3*), and source.

Some trigonometric simplifications lead to an expression of M_1

as:

$$M_1 = \frac{\left|1 - \mathrm{CAe}^{\mathrm{j}(\phi_1+\phi_S)}\right|^2}{\left|1 - \mathrm{CBe}^{\mathrm{j}(\phi_2+\phi_S)}\right|^2}$$

Assume,

$$\theta = \phi_1 + \phi_S$$

$$\mathrm{a} = \phi_1 \text{ and } \mathrm{b} = \phi_S$$

$$e^{j\theta} = \cos\theta + j\sin\theta \qquad \text{(I-1)}$$

Compound-angle formulae

$$\cos(a+b) = \cos a \cos b - \sin a \sin b \qquad \text{(I-2)}$$

$$\sin(a+b) = \sin \mathrm{a} \cos \mathrm{b} + \cos \mathrm{a} \sin \mathrm{b} \qquad \text{(I-3)}$$

This leads to

$$M_1 = \frac{1 + (CA)^2 - 2CA\cos(\phi_1 + \phi_S)}{1 + (CB)^2 - 2CB\cos(\phi_2 + \phi_S)} \qquad \text{(4)}$$

Using identity (I.2) and producing a homogeneous Eqn. instead of Eqn. 4 leads to

$$C^2 L_3 + 2C(L_1 \cos\phi_S + L_2 \sin\phi_S) + (M_1 - 1) = 0$$

where,

$$L_1 = A\cos(\phi_1) - M_1 B\cos(\phi_2) \qquad 5.1$$

$$L_2 = BM_1 \sin(\phi_2) - A\sin(\phi_1) \qquad 5.2$$

$$L_3 = M_1 B^2 - A^2 \qquad 5.3$$

or,

$$C = -K_1 \pm \sqrt{{K_1}^2 - \frac{M_1 - 1}{L_3}} \qquad (6)$$

here,

$$K_1 = (L_1 \cos(\phi_S) + L_2 \sin(\phi_S))/L_3$$

Repeating the previous scenario with subscript 2, letter B, and symbol M_1 with subscript 3, letter D, and symbol M_2 respectively, leads to

$$C = -K_2 \pm \sqrt{{K_2}^2 - \frac{M_2 - 1}{L_{33}}} \qquad (7)$$

here,

$$K_2 = (L_{11}\cos(\phi_S) + L_{22}\sin(\phi_S))/L_{33}$$

$$L_{11} = A\cos(\phi_1) - M_2 D\cos(\phi_3)$$

$$L_{22} = DM_2\sin(\phi_3) - A\sin(\phi_1)$$

$$L_{33} = M_2 D^2 - A^2$$

Equating equations (6) and (7), squaring twice then the resultant equation is:

$$\left[\frac{\alpha-\beta}{2(K_1)}\right]^2 - \frac{K_1(\alpha-\beta)}{K_1-K_2} + \alpha = 0 \qquad (8)$$

here,

$$\alpha = \frac{M_1 - 1}{L_3} \quad \text{and} \quad \beta = \frac{M_2 - 1}{L_{33}}$$

Multiplying Eqn. (8) by $4(K_1 - K_2)^2$ yields:

$$(\chi^2 + \chi_1{}^2)(\cos(\phi_S))^4 - (\chi_1{}^2 + 2\chi\chi_2)(\cos(\phi_S))^2 + \chi_2{}^2 = 0 \qquad (9)$$

here,

$$\chi = \alpha\left\{\left(\frac{L_{11}}{L_{33}}\right)^2 - \sigma - \left(\frac{L_{22}}{L_{33}}\right)^2\right\} + \beta\left\{\left(\frac{L_1}{L_3}\right)^2 - \sigma - \left(\frac{L_2}{L_3}\right)^2\right\}$$

where,

$$\sigma = \frac{L_1 L_{11} - L_2 L_{22}}{L_3 L_{33}}$$

$$\chi_1 = \alpha\left\{2\frac{L_{11}L_{22}}{{L_{33}}^2} - \gamma\right\} + \beta\left\{2\frac{L_1 L_2}{{L_3}^2} - \gamma\right\}$$

where,

$$\gamma = \frac{L_2 L_{11} + L_1 L_{22}}{L_3 L_{33}}$$

$$\chi_2 = \delta\left(\alpha\frac{L_{22}}{L_{33}} - \beta\frac{L_2}{L_3}\right)$$

where,

$$\delta = \frac{L_2 L_{33} - L_{22} L_3}{L_3 L_{33}}$$

Solving equation (9) gives:

$$\cos(\phi_S) = \pm\left\{\frac{\xi \pm \sqrt{\xi^2 - 4(\chi^2 + {\chi_1}^2){\chi_2}^2}}{2(\chi^2 + {\chi_1}^2)}\right\}^{1/2} \qquad \textbf{(10)}$$

here, $\xi = {\chi_1}^2 + 2\chi\chi_1$

Equation (10) will give four values for ϕ_S

Substituting these values in Eqn. (6) or (7) gives 4 values for C

These values will be filtered according to the restriction:

$$0 \leq C \leq 1 \tag{11}$$

An expectation that roots expressing complex reflection coefficients will be generative and may be illustrated with this result sample

V-2.1 Example

Carrying the experiment at 50 MHz with input power of 0 dBm

$$C1 = -0.0014 + 0.0012i$$

$$C2 = 0.1511 + 0.4932i$$

$$C3 = -0.0014 + 0.0012i$$

$$C4 = 0.1511 + 0.4932i$$

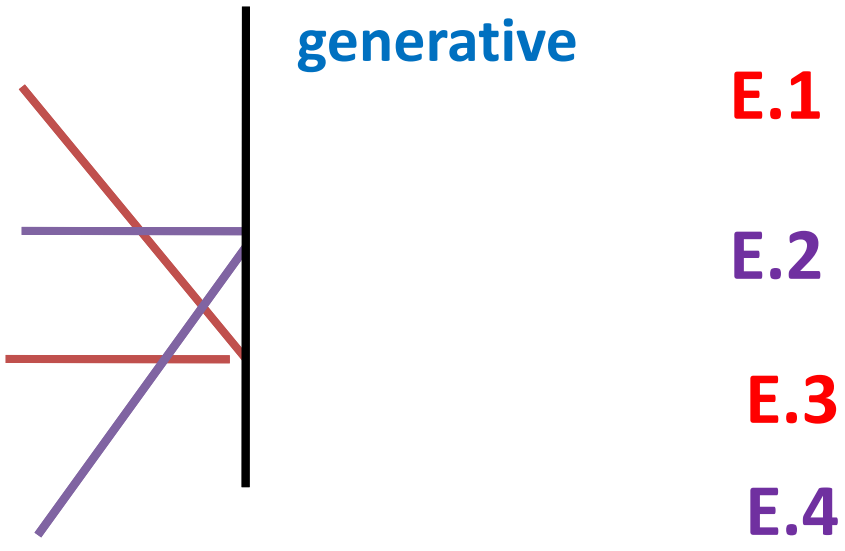

Note : roots E.1 and E.3 are generative, also roots E.2 and R.4 are generative, this is noticed to be common for all working frequencies

$$C1 = C3 = -0.0014 + 0.0012i$$

$$C2 = C4 = 0.1511 + 0.4932i$$

Algorithm output phase in radians are:

$$\phi_S(1) = 1.2961 - 2.8115j$$

$$\phi_S(2) = 1.8455 + 2.8115j$$

$$\phi_S(3) = 1.2961 + 2.8115j$$

$$\phi_S(4) = 1.8455 - 2.8115j$$

Again generative

Let

$$C = a + jb$$

$$\phi_S = x + jL$$

So,

$$\Gamma_S = Ce^{j\phi_S}$$
$$= \frac{(a\cos x - b\sin x) + j(b\cos x + a\sin x)}{e^L} \quad (12)$$

Applying Eqn. (12) under the recalled restriction (11)

$$0 \leq C \leq 1$$

This leads to:

$$C = 0.1511 + 0.4932i$$

$$C = -0.0014 + 0.002i$$

Up to now, the algorithm gives two values for reflection coefficient, so a trial for unification will be introduced.

A flush short and flush open instead of power meter 2, also the same will be applied for power meter 3 (Fig. 8) with the modified mathematical scenario applied *(This calibration is relatively lengthy, and will not be mentioned here) It leads to:*

$$C = -0.0014 + 0.002i$$

or,

$$C = 0.0018\angle 139.4006\ degrees$$

V-2.2 Instrumentation

The following instruments are connected as shown in Fig. 8

Thermistor mount *HP 8478B (s: 3303U00534)* attached to *HP 432A* power meter (s: 1848A17444) is the load number 1

The output radio frequency (RF) voltage V_{RF} (in case of RF power is on and off) and the compensating voltage V_{comp} are measured using HP 3457A digital multimeter.

Thermistor mount *HP 8478B (s: 3318A25104)* attached to *HP 432A* power meter (s: 1848A17444) is the load number 2.

Thermal power sensor R&S NRP-Z55 (ID: 1138.2008.04-140060-CR) attached to channel A of R&S NRP2 power meter is the load number 3.

The three loads are connected alternatively to *R&S* SMB 100A signal generator (100 KHz-40 GHz).

Reflection coefficients of the three sensors (loads) are measured using R&S ZVA 40 vector network analyzer (10 MHz-40 GHz) with Metas software version 2 [26]

The SI traceability of S-parameters is established through calibration standards [19-20] (Agilent calibration kit 85054B which is generic and traceable to UME-Turkey).

Effective efficiencies of thermistor mounts were extracted from UME-Turkey microcalorimeter which is now Egypt reference power standard (figure 9)

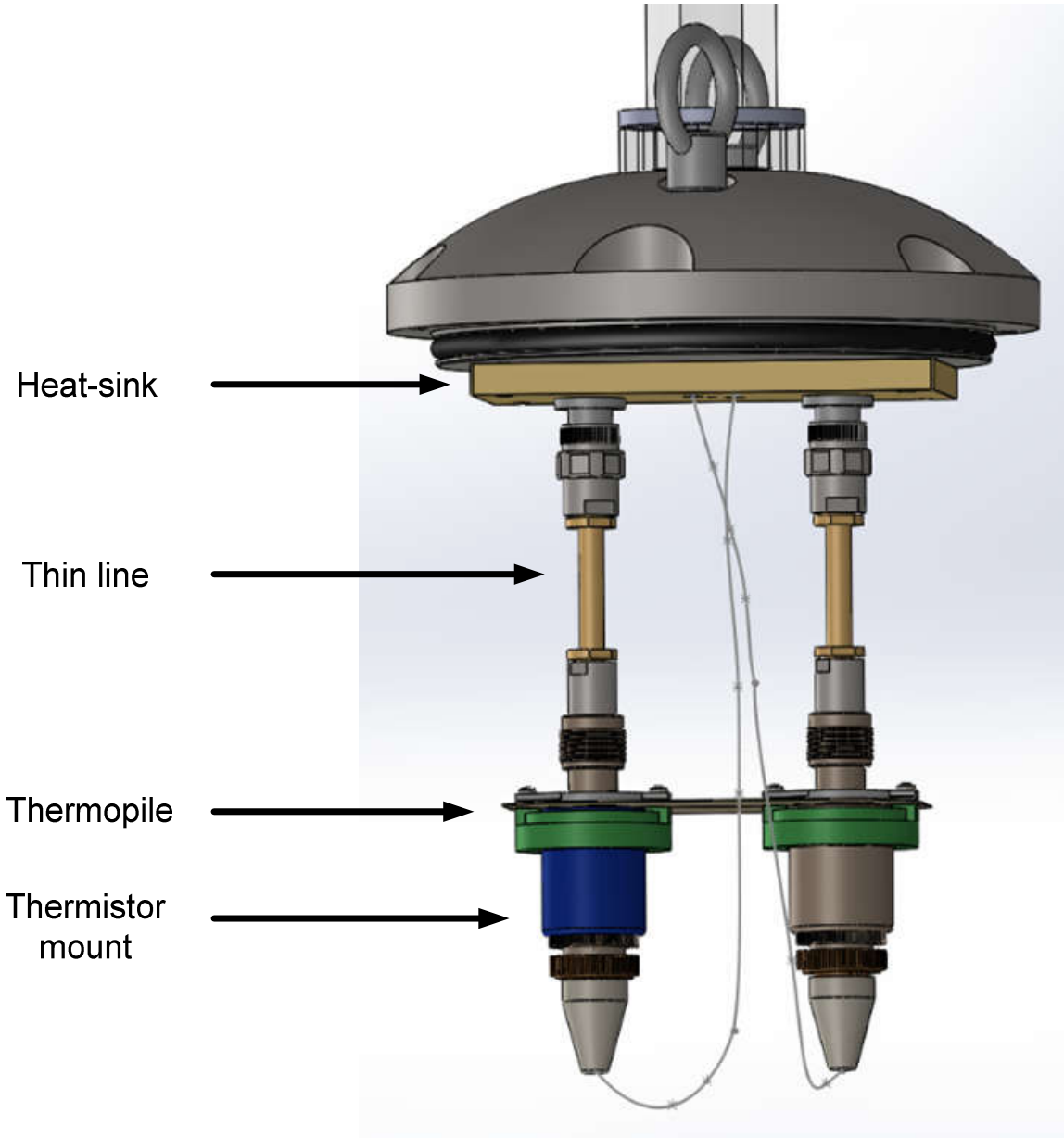

Fig. 9 UME microcalorimeter lines and connections

Before carrying measurement, the whole set-up (Fig. 8) is warmed for 120 minutes, the waiting period between successive measurements is 30 minutes.

The measurement environmental conditions are: temperature:

$(23 \pm 1)\ ^{\circ}\mathrm{C}$ **and** RH: 40% ± 10 %.

V-2.3 Uncertainty approach

Uncertainty calculating algorithm depends completely on ANAMET Report 037 November 2002 [25], equations (3-9)

Replacing S (complex scattering parameter of original work of Ridler by Γ_S which is the source complex reflection coefficient

V-2.4 Results

Frequency (GHz)	Reflection coefficient (real)	Reflection coefficient (imaginary)	Reflection Coefficient (magnitude)	Reflection Coefficient (phase radian)	Combined Uncertainty	Reflection Coefficient (phase degrees)	Uncertainty (degrees)
0.05	0.1511 -0.0014	0.4932 0.0012	0.5158 0.0018	1.2735 2.4330	0.0096	72.9662 139.4006	14.04
2.0	1.6974 -0.0069	2.9310 -0.0032	3.3870 0.0076	1.0459 -2.7073	0.014	59.9257 -155.1169	20.72
8.0	0.0890 0.0015	-0.2865 -0.0038	0.3000 0.0041	-1.2696 -1.1948	0.047	-72.7427 -68.4570	19.12
12.0	0.3725 0.0350	-1.2058 -0.0590	1.2620 0.0686	-1.2712 -1.0354	0.083	-72.8344 -59.3241	15.89
15.0	0.4841 0.0232	0.8852 -0.0586	1.0089 0.0630	1.0704 -1.1938	0.0105	61.3294 -68.3997	13.63
18.0	0.8563 0.0098	-0.5663 -0.0239	1.0266 0.0258	-0.5834 -1.1817	0.0183	-33.4264 -67.7064	15.98

NOTE:

During this measurement, a laboratory maintenance of its infra structure were decided, so 3 trials only were carried on among unstable environmental conditions. In future, more trials and good stable condition will lead to more accurate results.

VI- References

[1] J.R. Juroshek, 'A direct calibration method for measuring equivalent source mismatch', Microwave Journal, October 1997. pp. 106 - 118

[2] S.S. Devi et al, “Effective source mismatch uncertainty evaluation using resistive power splitter up to 18 GHz”, Int. Metrol. Qual. Eng. 6, 306 (2015)

[3] R.D. Moyer, “Techniques for measuring the effective source reflection coefficient of two-resistor-splitter”, IEEE Trans. On I&M, Vol. IM-36, No. 1, March 1987 pp. 23-28

[4] Thomas Reichel, 'Meßverfahren für den äquivalenten Reflexionsfaktor von PowerSplittern', Presentation for 139th PTB seminar, May 1998, PTB report E-58. ISBN 3-89701-173-5

[5] S.S. Devi et all, "Effective source mismatch uncertainty evaluation using resistive power splitter up to 18 GHz" Int. J. Metrol. Qual. Eng. 6, 306 (2015).

[6] R.D. Moyer, "Techniques for measuring the effective source reflection coefficient of two-resistor power splitters", IEEE Transactions on I&M, Volume: IM-36 , Issue: 1 , March 1987.
[7] Rohde & Schwarz, "Measurement Method for Determining the Equivalent Reflection Coefficient of Directional Couplers and Power Splitters" Application note: Harald Jäger 08.02 – 1EZ51_1E. (http://www.rohde-schwarz.com)
[8] HEWLETT PACKARD, " High Frequency Swept Measurement ", Application note 183 (Appendix A). December 1978.
[9] T.M. Wallis and A. Lewandowski, "Statistical Measurement Techniques for Equivalent Source Mismatch of 1.85 mm Power Splitter", 72nd ARFTG Microwave Measurement Symposium, "Time Domain and Frequency Domain Measurement" Dec. 9th - 12th 2008.

[10] T. Kang, D.J. Lee, and J. Kwon, "Direct comparison technique using a transfer power standard with an adapter and its uncertainty" CPEM Digest, conference on precision electromagnetic measurements, July 2012 (https://www.researchgate.net/publication/261199847).
[11] R.A. Johnson "Understanding microwave power splitter", Microwave Journal December 1975.
[12] G.F. Engen, "Amplitude stabilization of a microwave signal source", IRE, Trans. MTT-6(2)-202-206-1958.
[13] I. A. Harris et al, "Re-examination of mismatch uncertainty when measuring microwave power and attenuation", IEE PROC, VOL. 128, pt H, No. 1, February 1981.
[14] M. P. Weidman, "Direct Comparison Transfer of Microwave Power Sensor Calibrations", NIST Tech. Note 1379, January 1996.
[15] I. Kneppo, "Microwave Measurement by Comparison Methods" Elsevier Science Ltd, February 1, 1988.

[16] A. Lymer, "Power Measurement Apparatus and Methods Therefor", Patent Application Publication, No 2004/0183519A1, Sept. 23, 2004.
[17] A. Fantom, "Radio frequency & microwave power measurement" 1990, Peter Peregrinus Ltd
[18] M. Zeier et al, "Establishing traceability for the measurement of scattering parameters in coaxial line systems" Metrologia, 55(2018) 523-536.
[19] Luca Perregrini, " Course on Microwave Measurements: Vector Network Analyzer", Dept. of Electrical, Computer and Biomedical Engineering, University of Pavia, web: Microwave.unipv.it
[20] Michael Hiebel, "Vector Network Analyzer (VNA) Calibration: The Basics", rohde-schwarz.com/USA, 2008.

[21] Nick M. Ridler and Martin J. Salter, "Evaluating and expressing uncertainty in complex *S-parameter measurements",* Conference: ARFTG Conference Digest-Fall, 56th, Volume: 38, December.
https://www.researchgate.net/publication/224061899
[22] A. Widarta, "Determination of RF Source Reflection Coefficients Using Step Attenuator Measurement Technique", conference on precision electromagnetic measurements, CPEM, 2012, 1-6 July, Washington DC.
[23] A. Torok et all, "Efficient Broadband Method for Equivalent Source Reflection Coefficient Measurements", IEEE transaction on I&M, Vol. 50 No. 2, April 2001.
[24] Yu Song et al, "Evaluation of Complex Measurement Uncertainty in Polar Coordinate for Equivalent Source Reflection Coefficient", conference on precision electromagnetic measurements, CPEM, 2012, 1-6 July, Washington DC, USA.

[25] N. M. Ridler and M. J. Salter, “An approach to the treatment of uncertainty in complex S-parameter measurements”, Metrologia 2002, 39, 295-302.
[26] https://www.metas.ch/metas/en/home/fabe/hochfrequenz/vna-tools.html
[27] R. W. Beatty, “Insertion loss concepts”, Proc. IEEE, 1964, 52(6), 663-671.
[28] R.D. Moyer, “Techniques for Measuring the Effective Source Reflection Coefficient of Two-Resistor Power Splitters”, IEEE I&M, Vol. IM. 36 No. 1, March 1987.
[29] R.W. Beatty, “Microwave Impedance Measurements and Standards”, National Bureau of Standards Monograph 82, Issued August 12, 1965.