EMPIR EURAMET

The EMPIR initiative is co-funded by the European Union's Horizon 2020 research and innovation programme and the EMPIR Participating States

RF MICROWAVE

S-Parameter Measurements

Murat Celep

March 4, 2019

TÜBİTAK UME

TÜBİTAK UME

Contents:

S Parameters

S Parameters Measurement

Measurement Errors

Measurement Model

Measurement Uncertainty

S Parameters

What are S-parameters?

S-parameters are used to represent a linear microwave device or linear circuit as a black box.

The behavior of the black box can be predicted without any information for the contents.

The black box could contain anything such as;

- a resistor,
- a capacitor,
- an inductance,
- a transmission line,
- an integrated circuit.

The black box can also be called as a network.

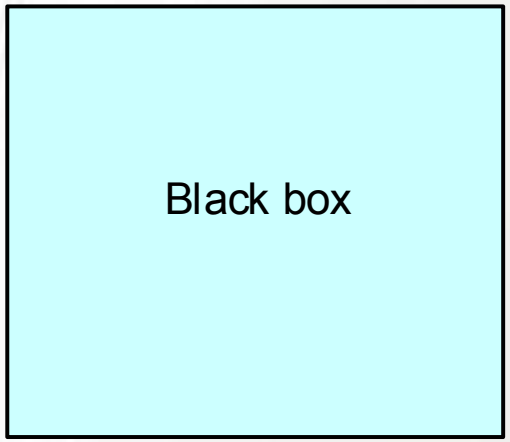

S Parameters

The black box or network could have any number of ports (1, 2, 3, … N).

Each port is showed with pair of lines.

Now, assume that black box has two ports.

It can be called as two ports network.

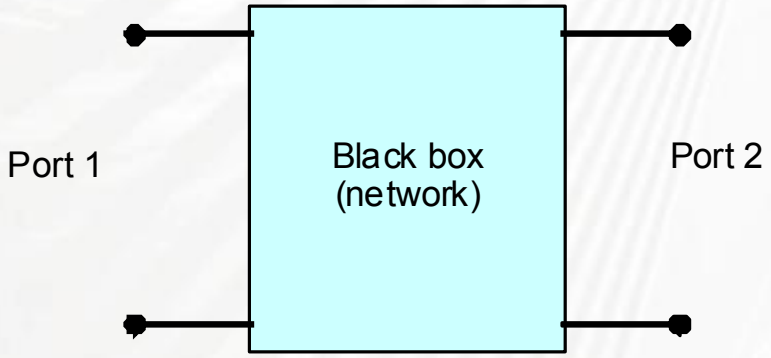

S Parameters

Power, voltage and current can be considered to be in the form of waves travelling in both directions on the transmission lines.

It is assumed that signal is applied to port 1 (V_{i1}).

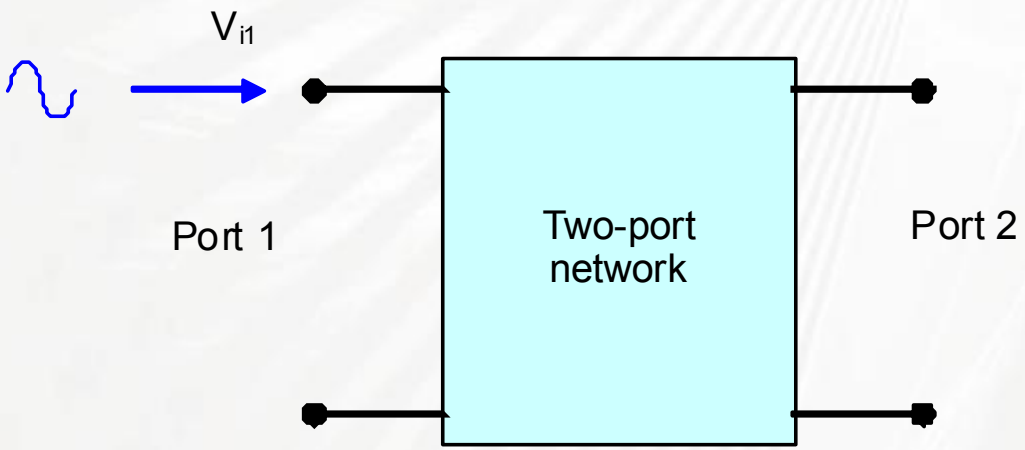

S Parameters

Some part of the signal reflects back out of port 1 (V_{r1}) and some part of the signal exits from the other port (port 2, V_{r2}).

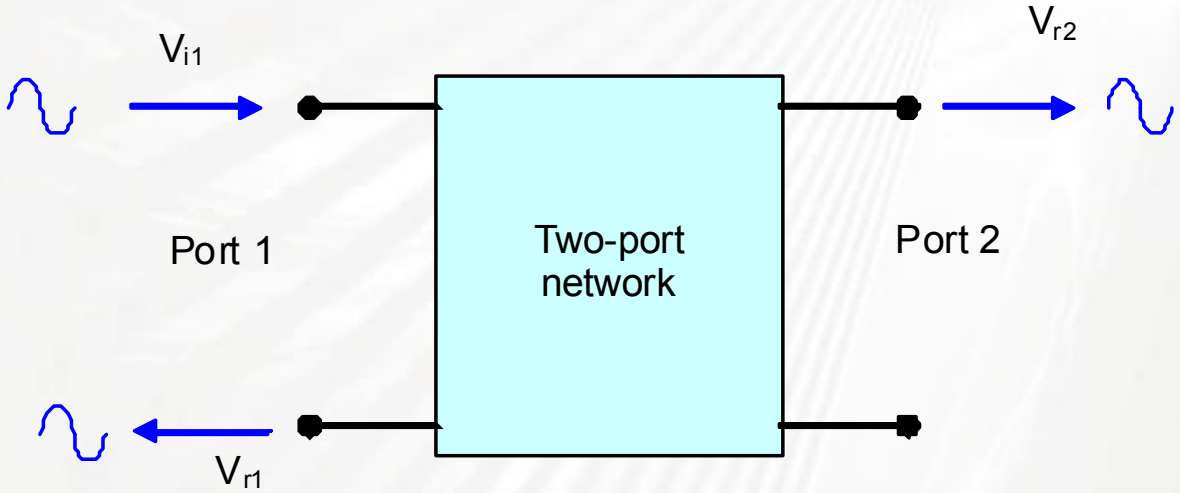

S Parameters

S_{11} is one of the scattering (S) parameters of the two port network.

It refers to the signal reflected from port 1 when signal is applied to port 1.

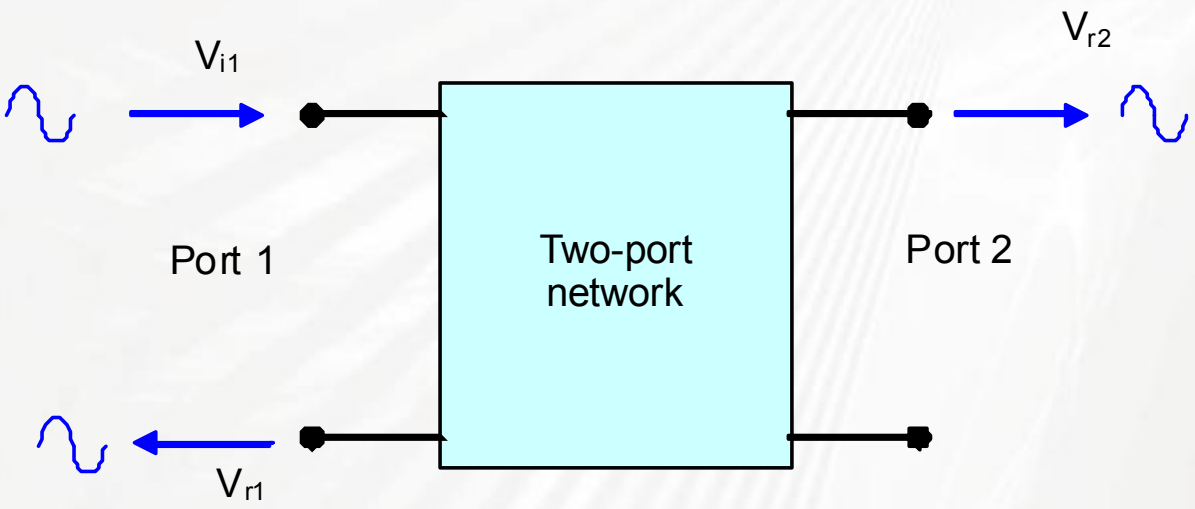

S_{11} is is a ratio of the two waves of the port1.

S Parameters

When the signal is applied to port 2;

Some part of the signal reflects back out of port 2 (V_{r2}) and some part of the signal exits from the other port (port 1, V_{r1}).

The ratio of the reflected wave from port 2 and incident wave is called as S_{22}.

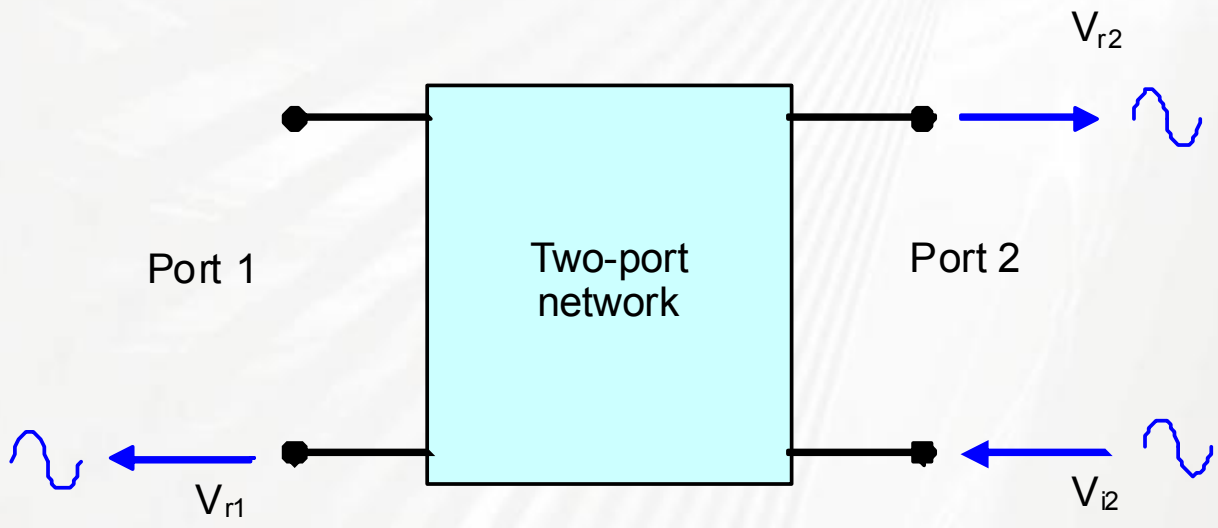

S Parameters

When the signal is applied to port 2;

Some part of the signal reflects back out of port 2 (V_{r2}) and some part of the signal exits the other port (port 1, V_{r1}).

The ratio of the excited wave from port 1 and incident wave is called as S_{12}.

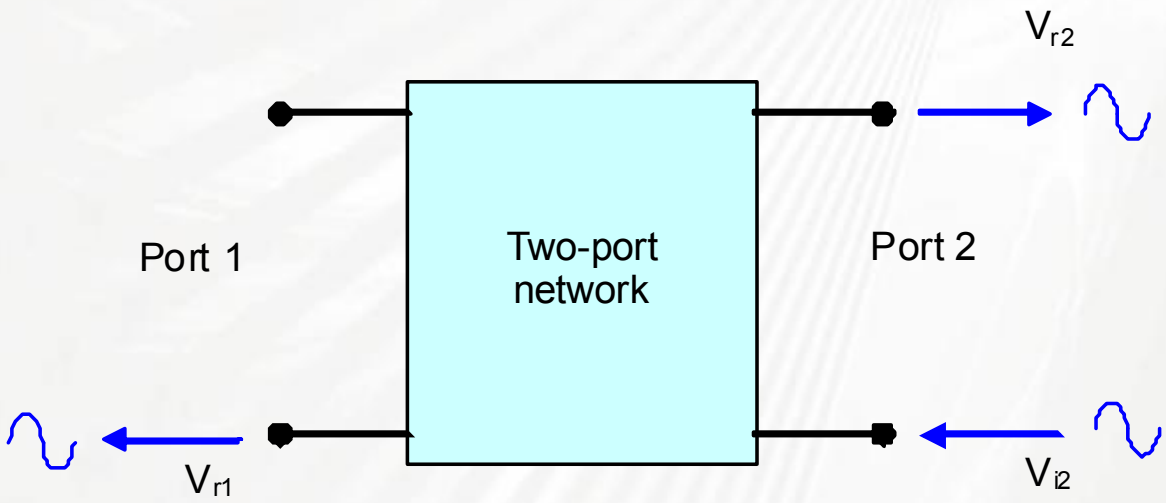

S Parameters

The ratio of the excited wave from port 2 and incident wave to port 1 is called as S_{21}.

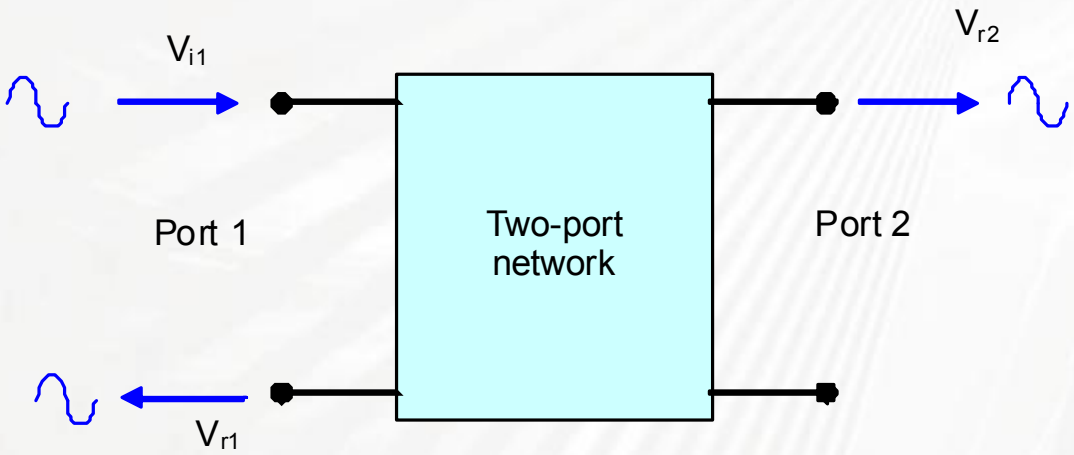

S Parameters

All waves are showed on the two-port network.

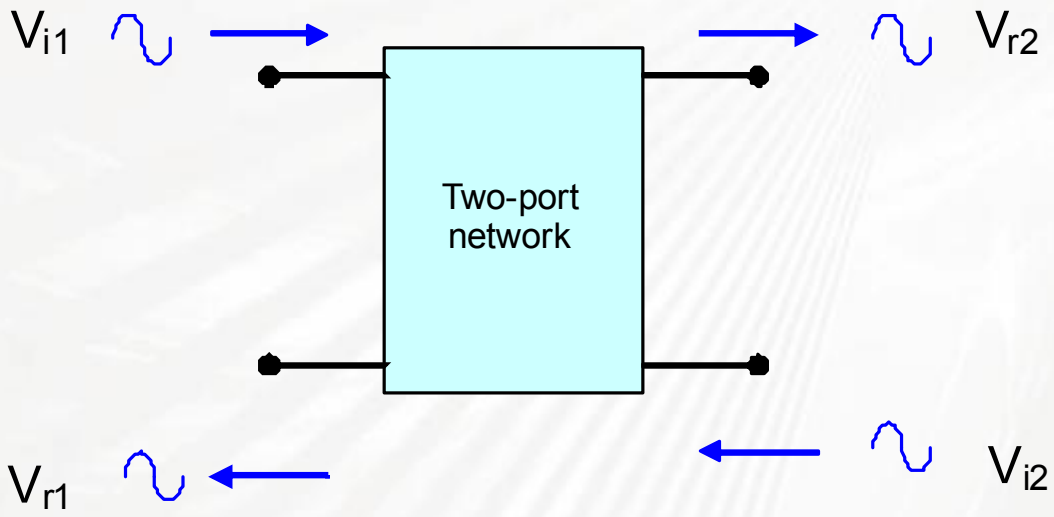

$$V_{r1} = S_{11}V_{i1} + S_{12}V_{i2}$$

$$V_{r2} = S_{21}V_{i1} + S_{22}V_{i2}$$

S Parameters

In practice, it is not easy to measure voltage at high frequencies because of wavelength of the signal.

So, voltage is not useful at high frequencies.

If the incident and reflected voltages are normalized with square root of a characteristic impedance (Z_0), square root of power will be obtained as;

$$b_n = \frac{V_{rn}}{\sqrt{Z_0}} \qquad a_n = \frac{V_{in}}{\sqrt{Z_0}}$$

New equations of the two port network using power are given below.

$$b_1 = S_{11} a_1 + S_{12} a_2$$

$$b_2 = S_{21} a_1 + S_{22} a_2$$

S Parameters

$$b_1 = S_{11} a_1 + S_{12} a_2$$

$$b_2 = S_{21} a_1 + S_{22} a_2$$

S parameters of the linear two-port network could be derived as;

$$S_{11} = \left.\frac{b_1}{a_1}\right|_{a_2=0} \qquad S_{21} = \left.\frac{b_2}{a_1}\right|_{a_2=0}$$

$$S_{12} = \left.\frac{b_1}{a_2}\right|_{a_1=0} \qquad S_{22} = \left.\frac{b_2}{a_2}\right|_{a_1=0}$$

S Parameters

$$S_{11} = \left.\frac{b_1}{a_1}\right|_{a_2=0} \qquad S_{22} = \left.\frac{b_2}{a_2}\right|_{a_1=0}$$

S_{11} and S_{22} are called as reflection coefficients of the related port of the two-port network

$$S_{12} = \left.\frac{b_1}{a_2}\right|_{a_1=0} \qquad S_{21} = \left.\frac{b_2}{a_1}\right|_{a_2=0}$$

S_{12} and S_{21} are called as transmission coefficients of the two-port network from port 2 to port 1 and port 1 to port 2 respectively.

S Parameters

Linear two-port network is given with its S parameters as below.

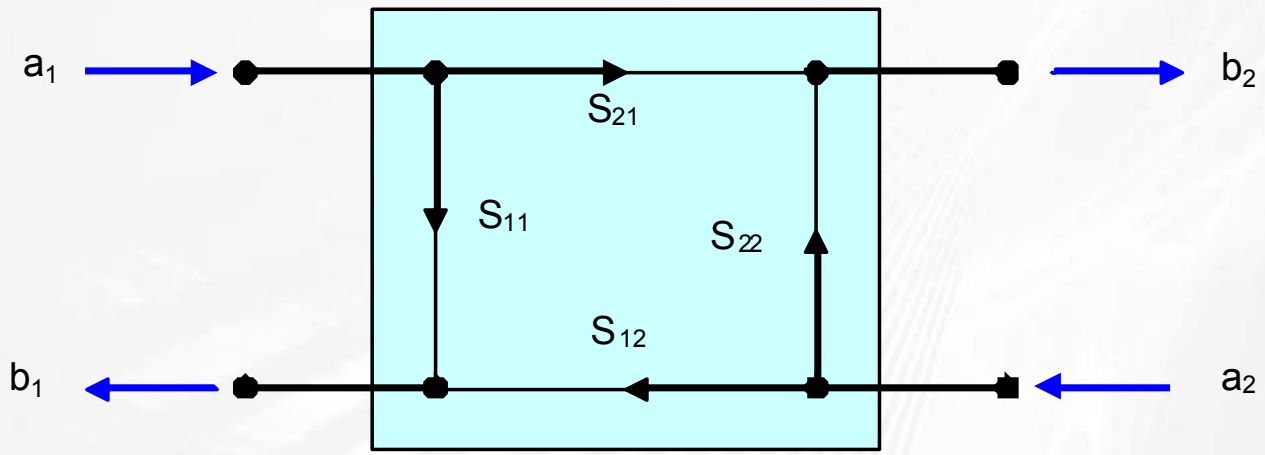

Transmitted and reflected waves will have changed in magnitude and phase respect to the incident wave.

So, S parameters are complex numbers (they have magnitude and phase).

S parameters contain eight separate numbers. While half of them are real numbers the others are imaginary numbers (or magnitude and phase).

S Parameters

S parameters depend on the two-port network and the characteristic impedances of the source (Z_S) and load (Z_L) used to measure it, and measured frequency.

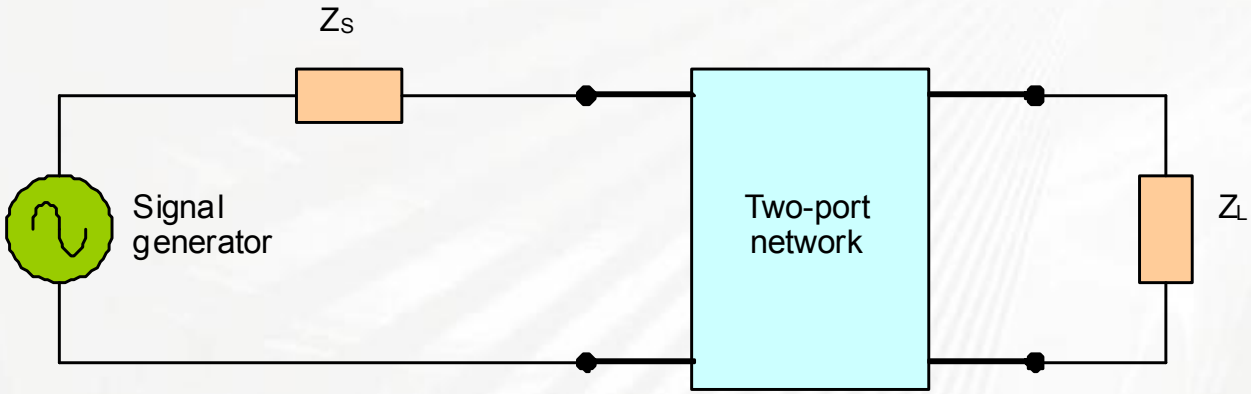

S-parameters change;

- if the two-port network is changed,
- if the load impedance is changed,
- if the source impedance is changed,
- if the frequency is changed.

S Parameters : Reflection Coefficient

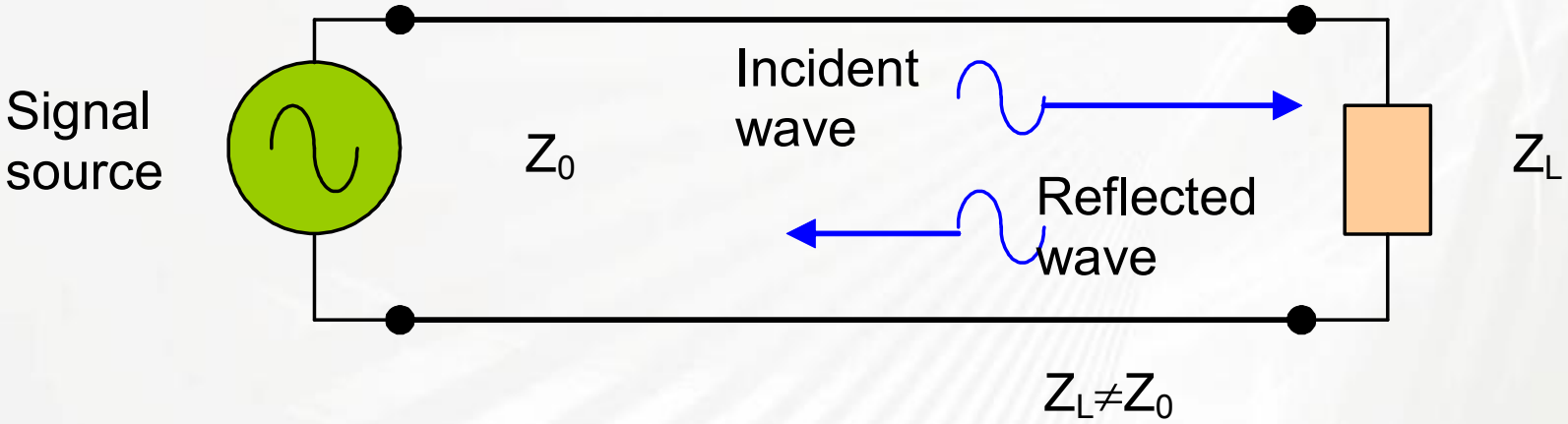

Reflection Coefficient : $\Gamma = \dfrac{\text{ReflectedWave}}{\text{IncidentWave}} = \rho\angle\emptyset$

$$\Gamma = \frac{Z_L - Z_0}{Z_L + Z_0}$$

S Parameters : Return Loss, SWR

Return Loss : $RL = 20 \times log(\rho)$

Standing Wave Ratio: $SWR = \frac{1+\rho}{1-\rho}$

$$SWR = \frac{|V_y|}{|V_d|}$$

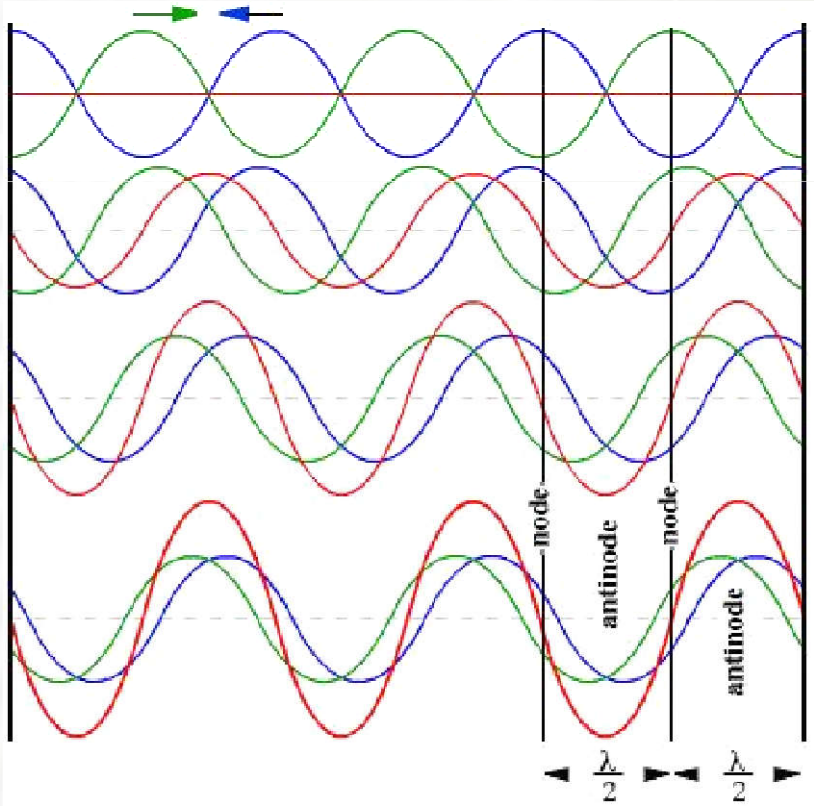

S Parameters : Return Loss, SWR

The ideal and the worst values of reflection coefficient, RL and VSWR

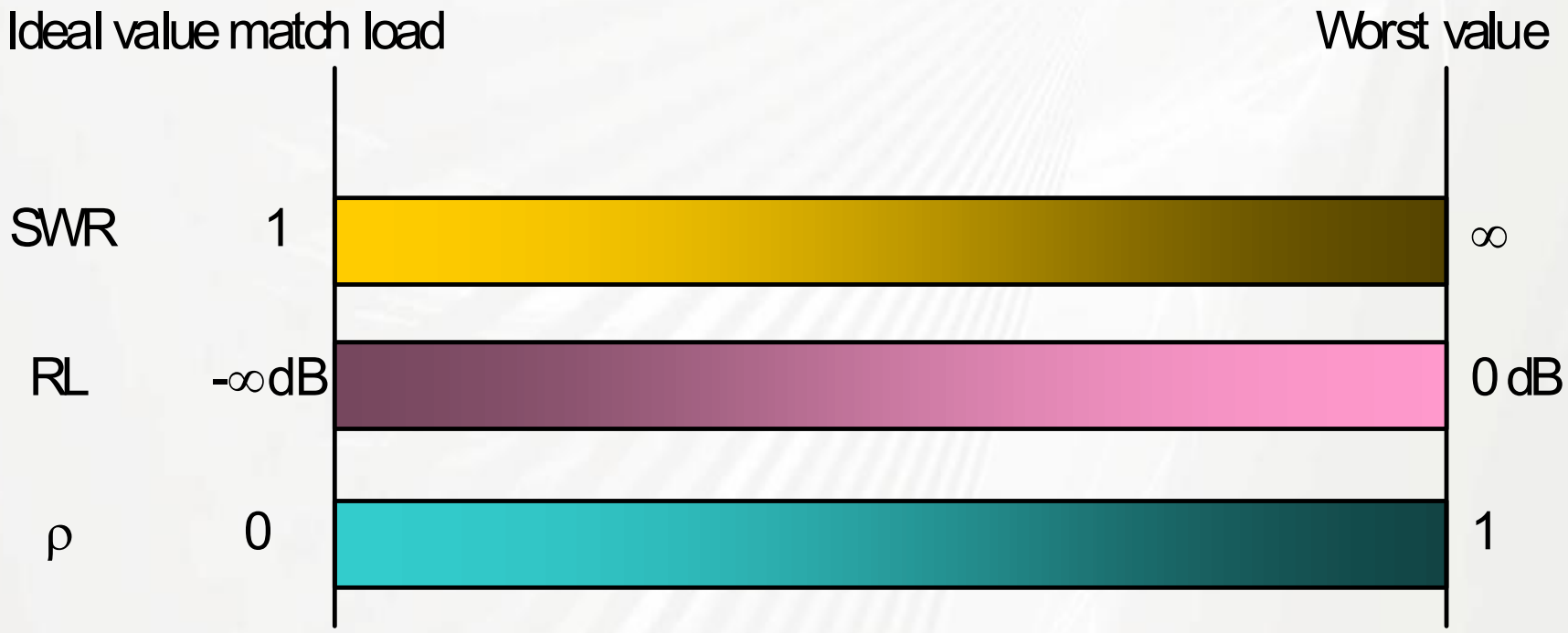

S Parameters : Insertion Loss

Insertion loss (IL) is defined as the ratio of the input power (P_{IN}) to the output power (P_{OUT}).

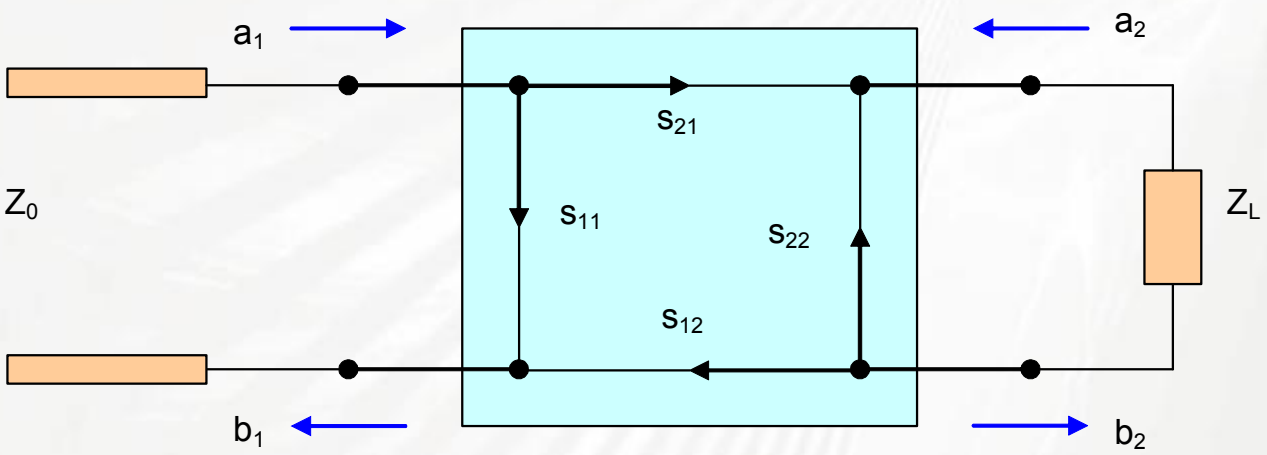

$$IL = 20log\frac{\left|(1-\Gamma_G s_{11})(1-\Gamma_L s_{22})-\Gamma_G\Gamma_L s_{12}s_{21}\right|}{\left|s_{21}\right|\left|1-\Gamma_G\Gamma_L\right|}$$

S Parameters: Attenuation Ratio

Attenuation ratio, is a special case of the insertion loss when $\Gamma_G = 0$ and $\Gamma_L = 0$.

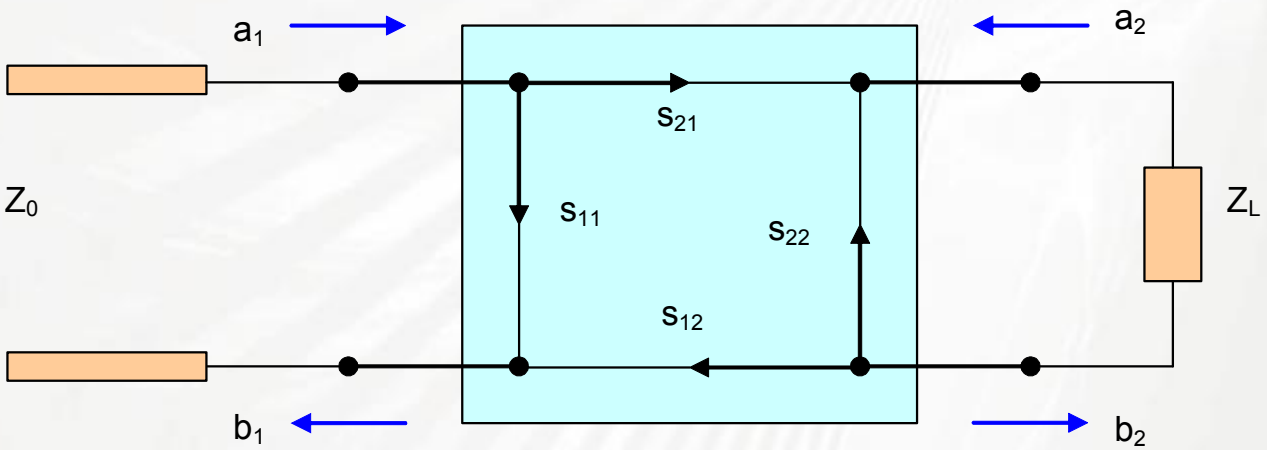

$$A = 20 log\left(\frac{1}{|s_{21}|}\right)$$

S Parameters Measurement

Generally, S parameters of a microwave device are measured using S parameter measurement system which includes vector network analyzer, cables and calibration kit.

Generalized network analyzer is given below.

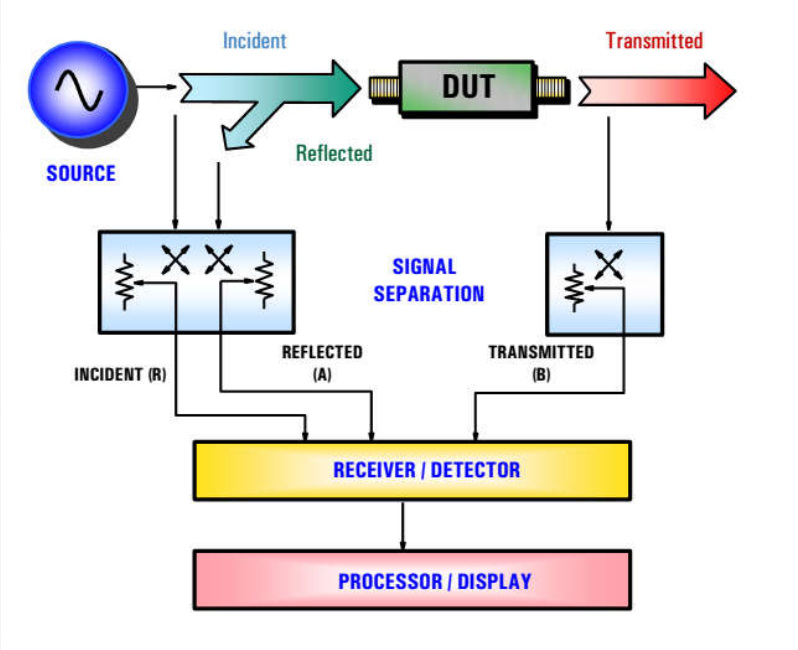

Source: www.keysight.com

S Parameters Measurement

Block diagram of the network analyzer which has four receiver.

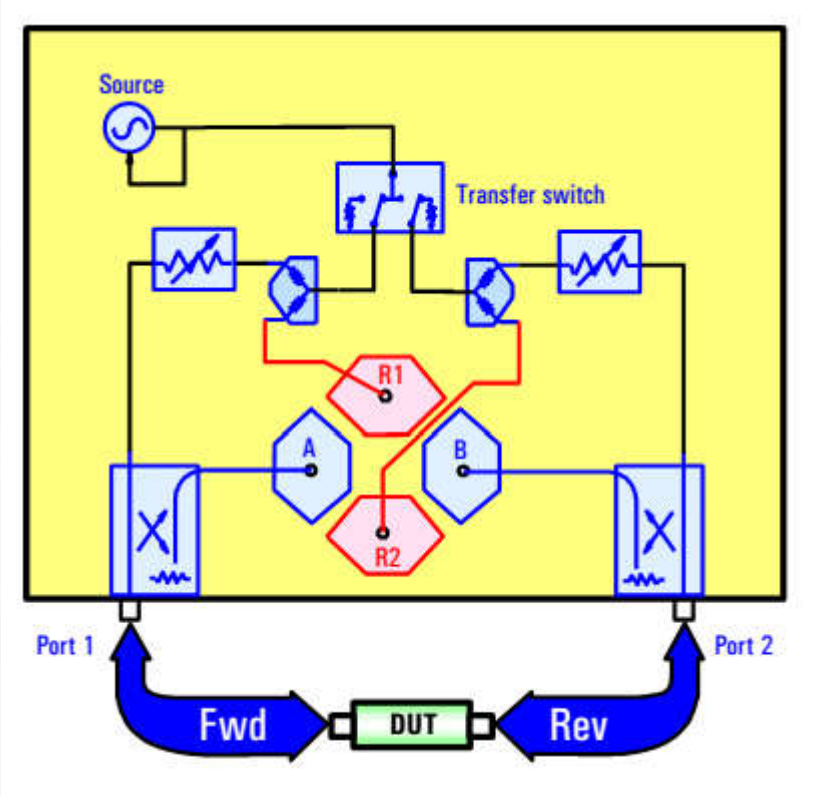

Source: www.keysight.com

S parameters of the device under test (DUT) can be measured with one connection.

Measurement Errors

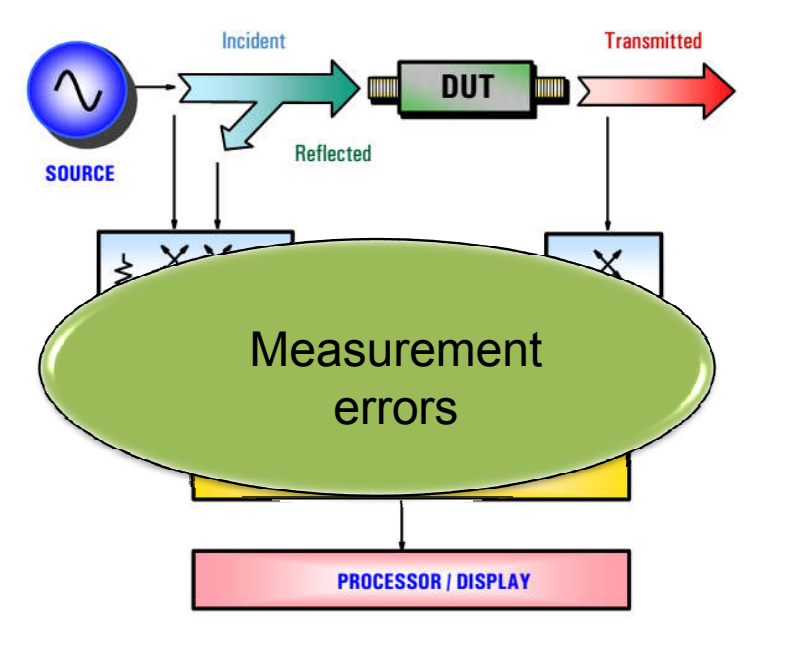

It is not possible to measure S parameters of the DUT without any error correction.

Measurement Errors

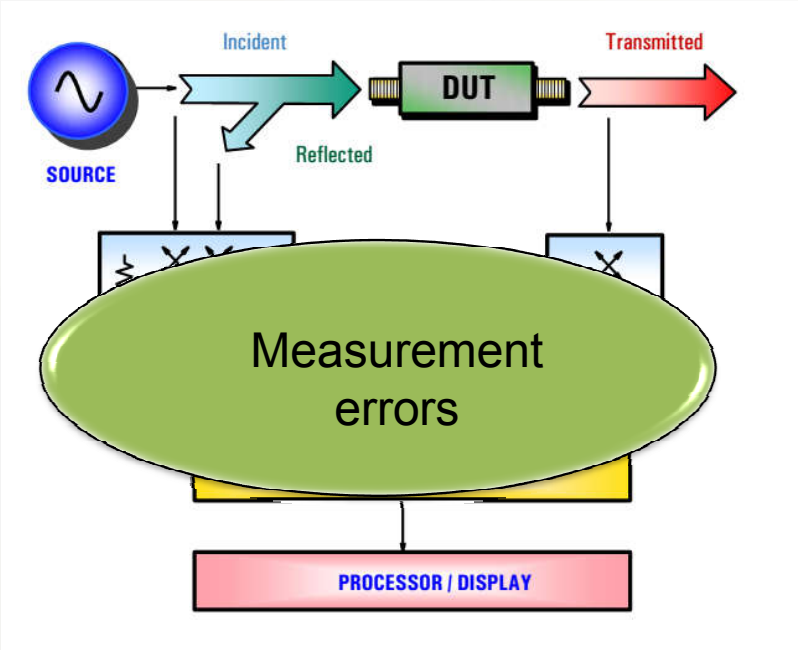

Possible measurement errors are,

- Systematic, (due to imperfections in VNA)
- Drift (measurements vary with time)
- Random (noise, etc…)

Measurement Errors

EURAMET guide no. 12 explains measurement error and uncertainty analyses for S parameters measurement of the DUT.

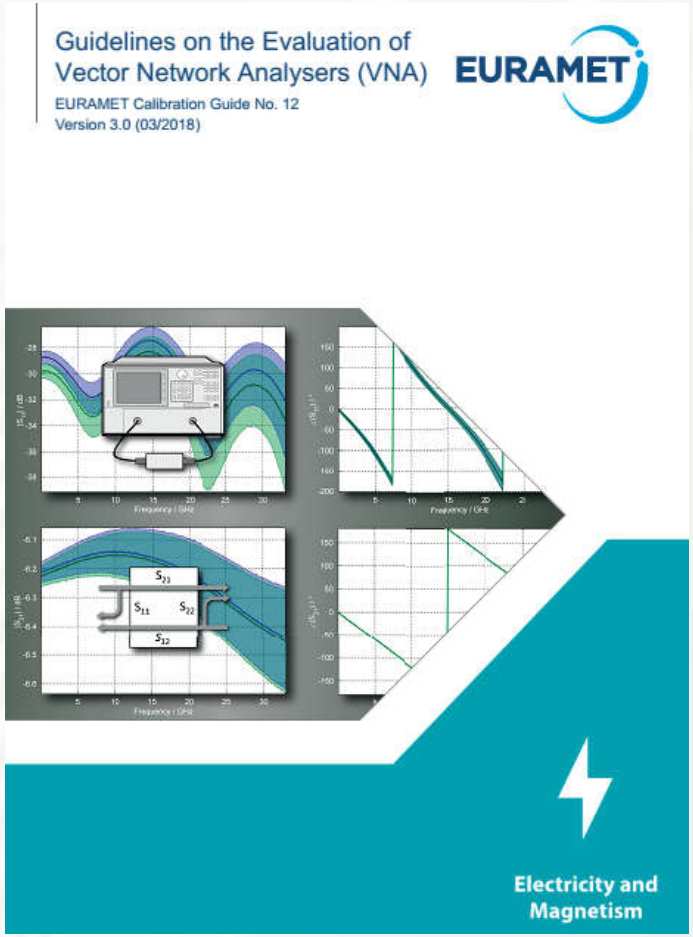

Measurement Model

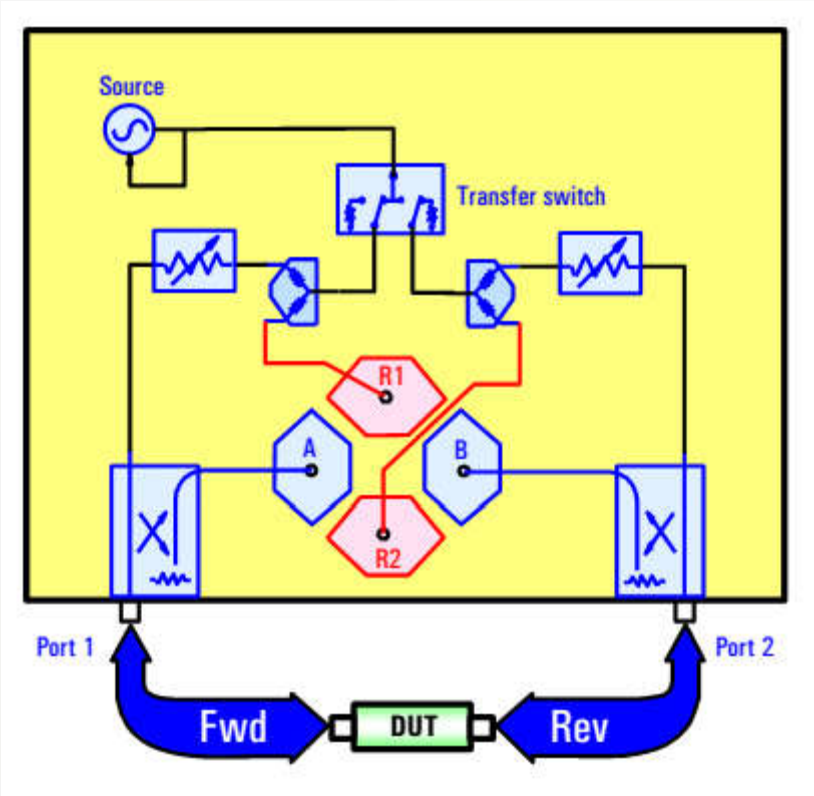

S parameters measurement with VNA

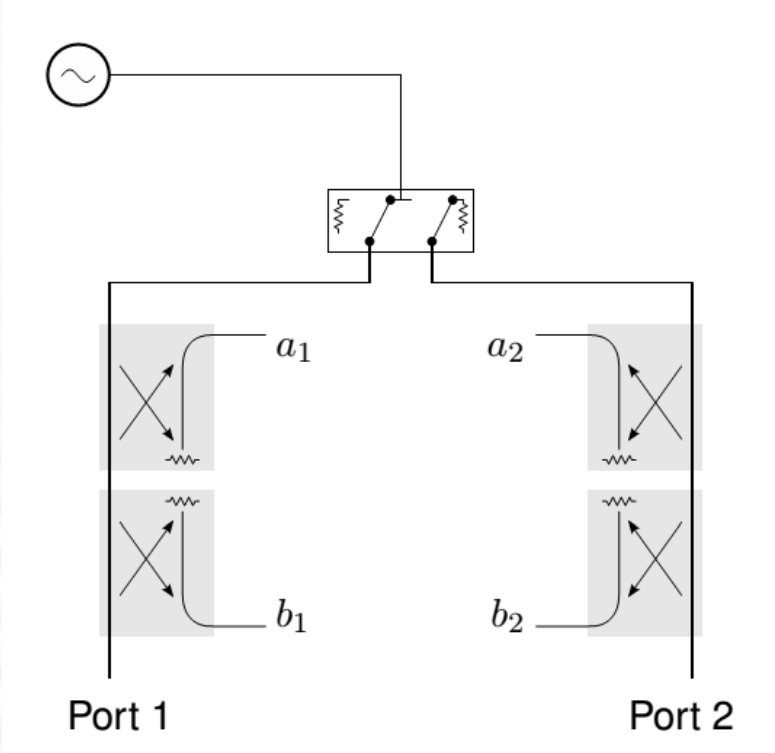

Simplified VNA model

Measurement Model

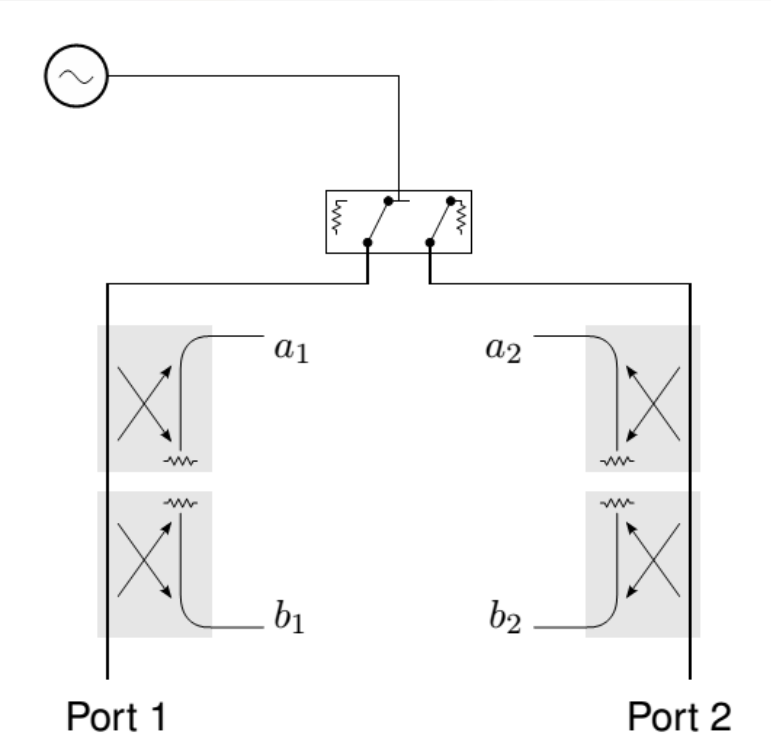

Simplified VNA model

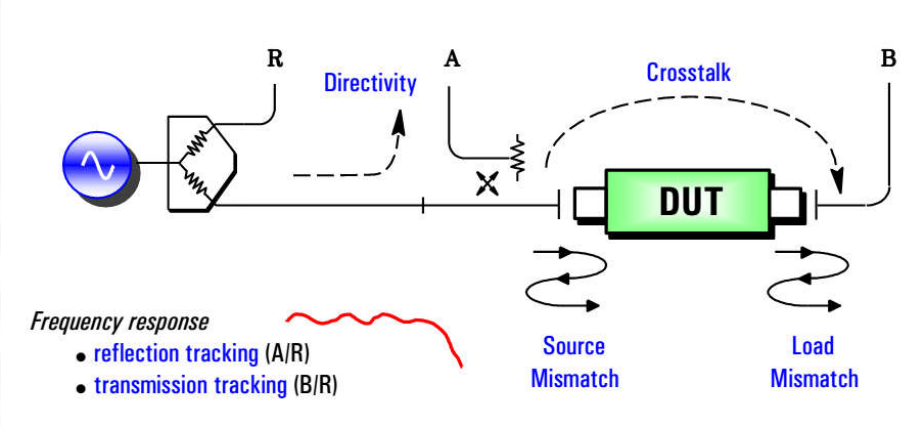

Systematic errors for one-way measurement

Measurement Model: One-Port

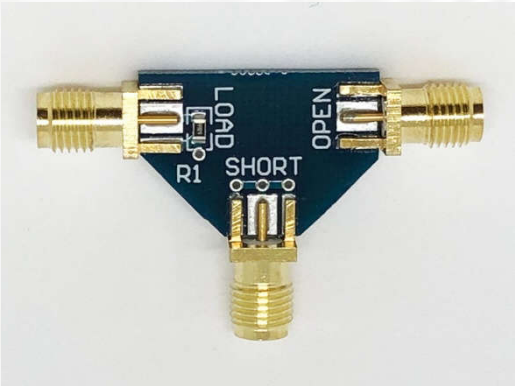

Measurement Model: One-Port

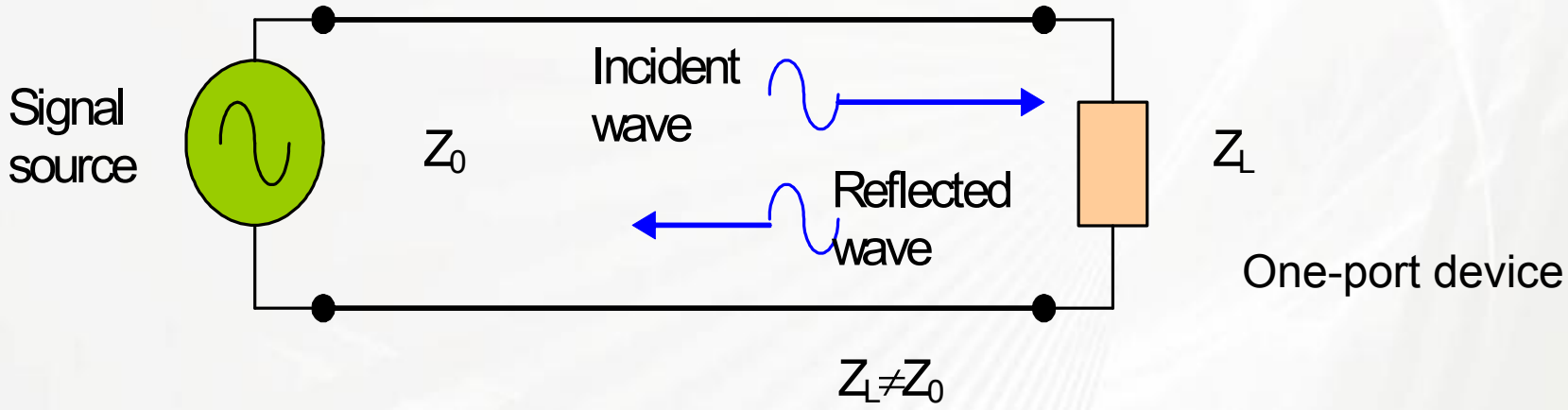

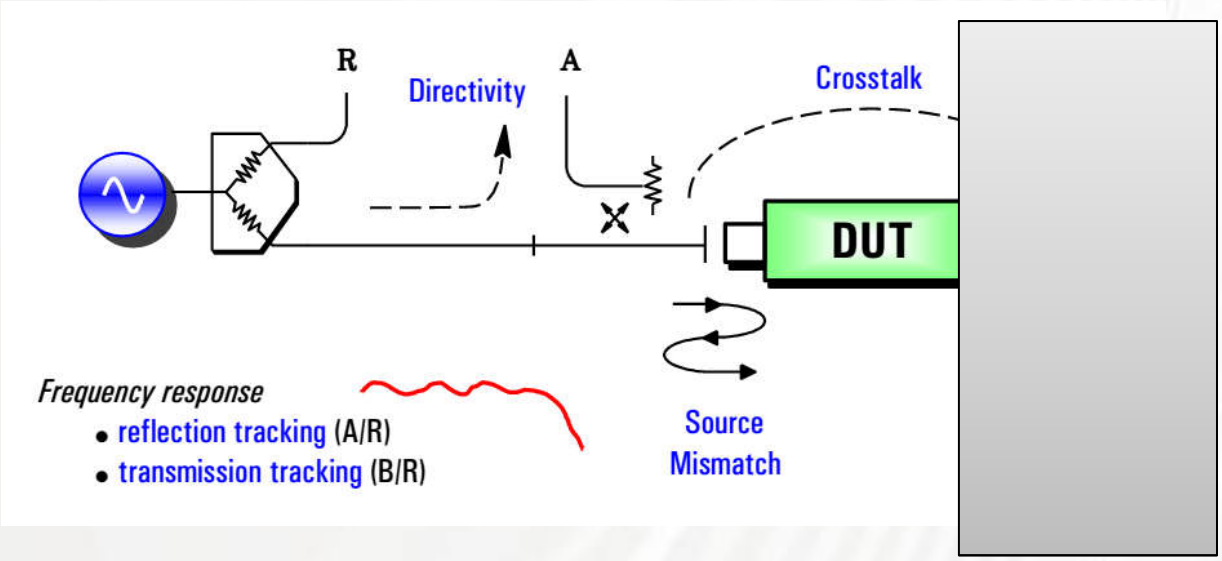

Systematic errors for one-way measurement

Measurement Model: One-Port

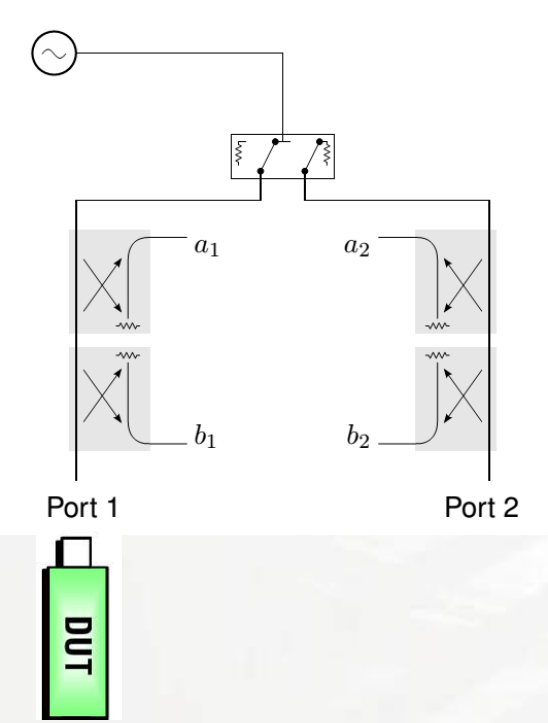

Simplified one-port DUT measurement setup

Measurement model of the one-port DUT measurement setup

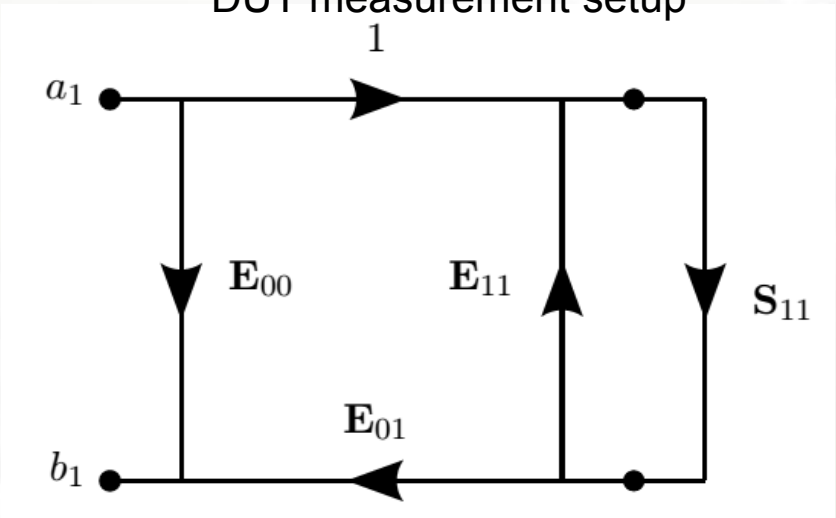

Symbol	Error coefficient
$\mathbf{E}_{00}$	Directivity
$\mathbf{E}_{01}$	Reflection tracking
$\mathbf{E}_{11}$	Source match

Measurement Model: One-Port

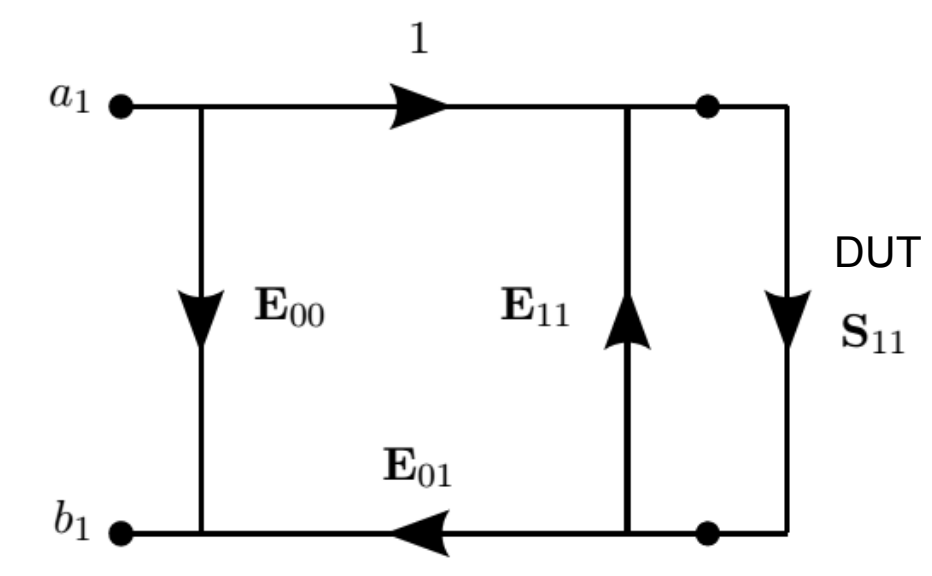

$$S_{11}^{m} = \frac{b_1}{a_1}$$

$$\mathbf{S}_{11}^{m} = \mathbf{E}_{00} + \frac{\mathbf{E}_{01}\mathbf{S}_{11}}{1 - \mathbf{E}_{11}\mathbf{S}_{11}}$$

$$\mathbf{S}_{11} = \frac{\mathbf{S}_{11}^{m} - \mathbf{E}_{00}}{\mathbf{E}_{11}\left(\mathbf{S}_{11}^{m} - \mathbf{E}_{00}\right) + \mathbf{E}_{01}}$$

It is necessary to solve the equation to calculate S_{11} (reflection coefficient of the DUT)

Measurement Model: One-Port

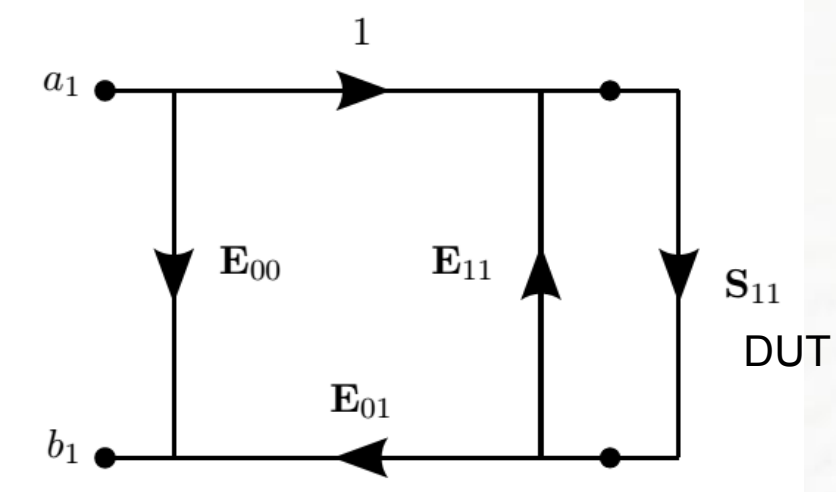

$$\mathbf{S}_{11} = \frac{\mathbf{S}_{11}^{m} - \mathbf{E}_{00}}{\mathbf{E}_{11}\left(\mathbf{S}_{11}^{m} - \mathbf{E}_{00}\right) + \mathbf{E}_{01}}$$

To solve the equation, three equations with three known standards are necessary to find value of three error terms.

The most common one-port method is based on

- a short,
- an open and
- a matched load as known (calibration) standards.

Common acronyms are SOL (short-open-load) or OSM (open-short-match).

Measurement Model: Two-Port

Measurement Model: Two-Port

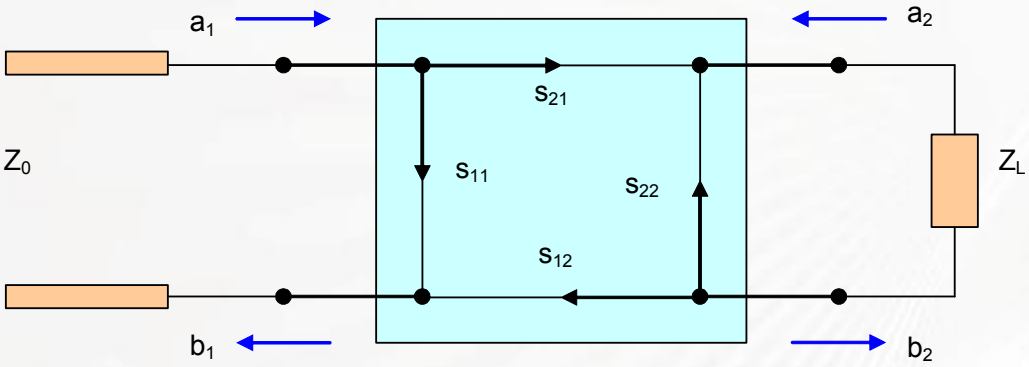

Two-port device with measurement detectors

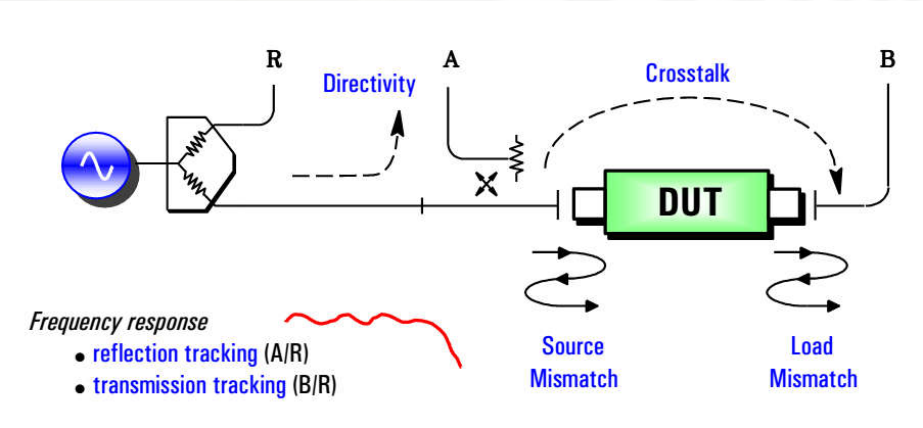

Systematic errors for one-way measurement

Measurement Model: Two-Port

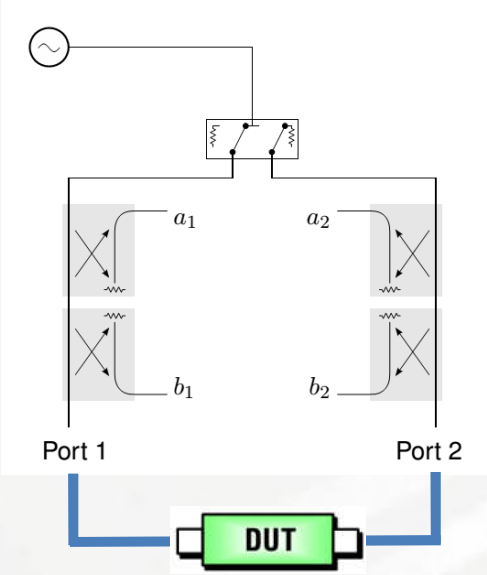

Measurement setup for two-port DUT

Systematic errors for one-way measurement

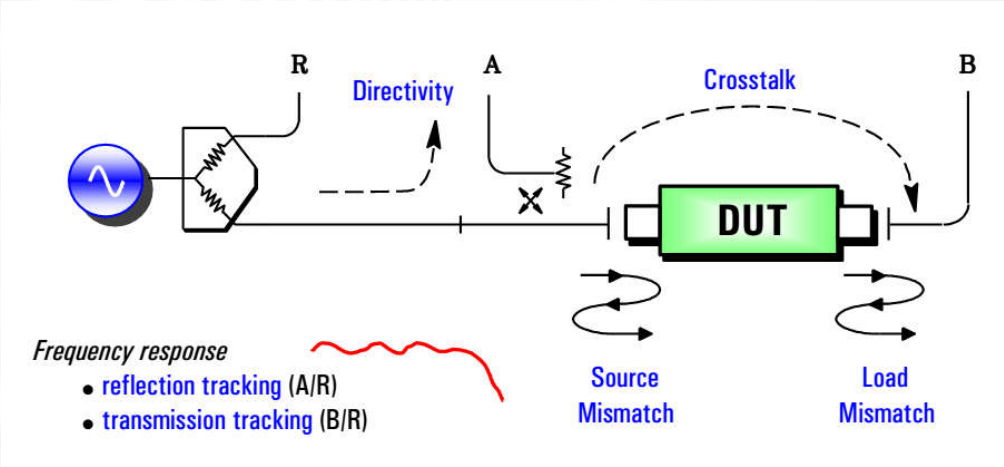

Measurement Model: Two-Port

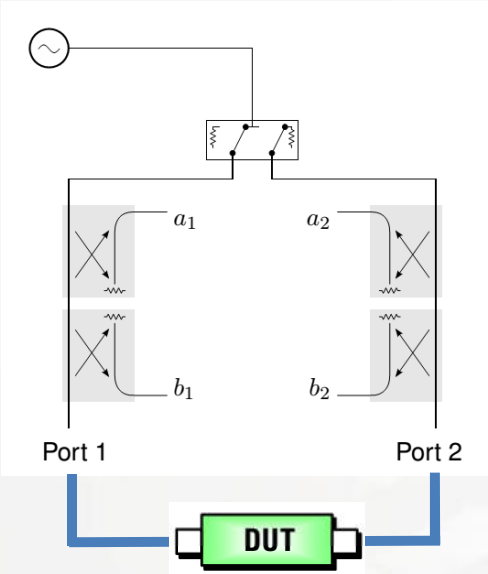

Measurement setup for two-port DUT

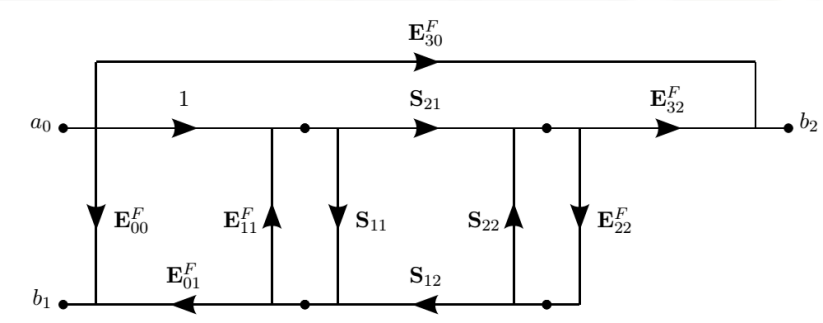

One-way (forward) measurement errors

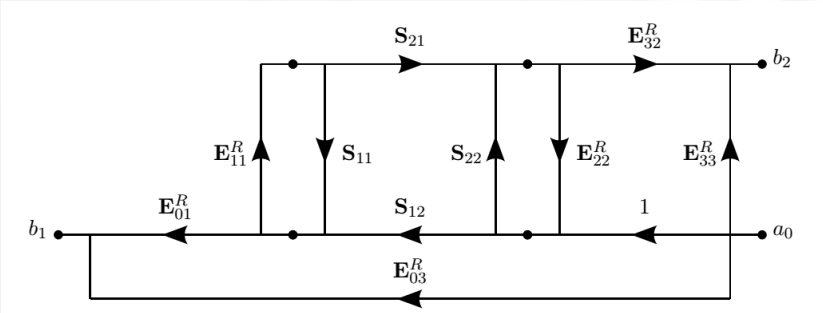

One-way (reverse) measurement errors

Symbol		Error coefficient
forward	reverse	
$\mathbf{E}^F_{00}$	$\mathbf{E}^R_{33}$	Directivity
$\mathbf{E}^F_{01}$	$\mathbf{E}^R_{32}$	Reflection tracking
$\mathbf{E}^F_{11}$	$\mathbf{E}^R_{22}$	Source match
$\mathbf{E}^F_{22}$	$\mathbf{E}^R_{11}$	Load match
$\mathbf{E}^F_{32}$	$\mathbf{E}^R_{01}$	Transmission tracking
$\mathbf{E}^F_{30}$	$\mathbf{E}^R_{03}$	Isolation

This error model is called as ten-term error model.

Measurement Model: Two-Port

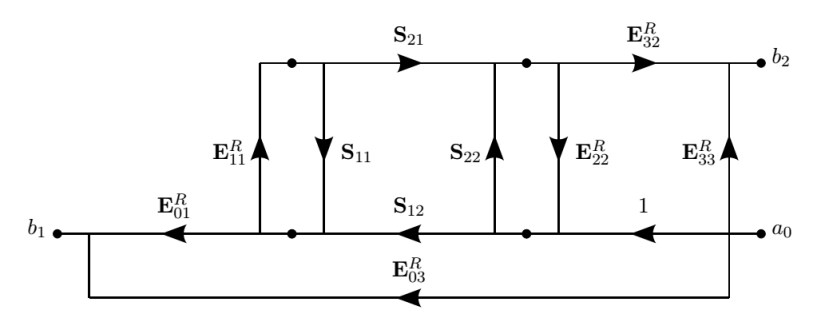

One-way (reverse) measurement errors

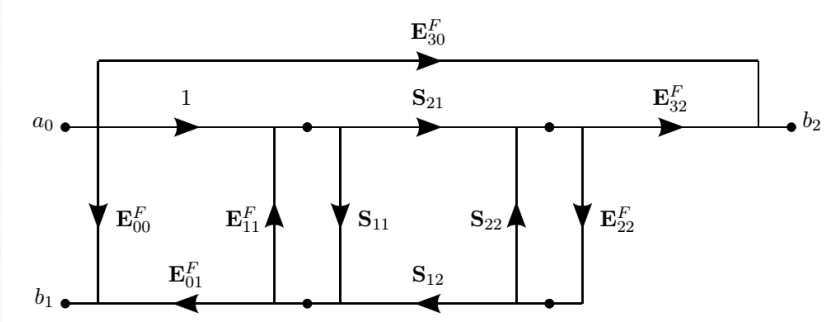

One-way (forward) measurement errors

The determination of the error coefficients of the ten-term error model is based on an SOL calibration at each port with an additional measurement of a flush thru.

The flush thru is performed direct connecting the two test ports. It is defined as a perfect connection of both reference planes with zero length in-between.

Common acronyms for this calibration method are SOLT and TOSM.

Measurement Model: Two-Port

S parameter equation for the ten-term measurement model

$$S_{11a} = \frac{\left(\frac{S_{11m} - E_D}{E_{RT}}\right)\left(1 + \frac{S_{22m} - E_D'}{E_{RT}'} E_S'\right) - E_L\left(\frac{S_{21m} - E_X}{E_{TT}}\right)\left(\frac{S_{12m} - E_X'}{E_{TT}'}\right)}{\left(1 + \frac{S_{11m} - E_D}{E_{RT}} E_S\right)\left(1 + \frac{S_{22m} - E_D'}{E_{RT}'} E_S'\right) - E_L' E_L\left(\frac{S_{21m} - E_X}{E_{TT}}\right)\left(\frac{S_{12m} - E_X'}{E_{TT}'}\right)}$$

$$S_{21a} = \frac{\left(\frac{S_{21m} - E_X}{E_{TT}}\right)\left(1 + \frac{S_{22m} - E_D'}{E_{RT}'} (E_S' - E_L)\right)}{\left(1 + \frac{S_{11m} - E_D}{E_{RT}} E_S\right)\left(1 + \frac{S_{22m} - E_D'}{E_{RT}'} E_S'\right) - E_L' E_L\left(\frac{S_{21m} - E_X}{E_{TT}}\right)\left(\frac{S_{12m} - E_X'}{E_{TT}'}\right)}$$

$$S_{12a} = \frac{\left(\frac{S_{12m} - E_X'}{E_{TT}'}\right)\left(1 + \frac{S_{11m} - E_D}{E_{RT}} (E_S - E_L')\right)}{\left(1 + \frac{S_{11m} - E_D}{E_{RT}} E_S\right)\left(1 + \frac{S_{22m} - E_D'}{E_{RT}'} E_S'\right) - E_L' E_L\left(\frac{S_{21m} - E_X}{E_{TT}}\right)\left(\frac{S_{12m} - E_X'}{E_{TT}'}\right)}$$

$$S_{22a} = \frac{\left(\frac{S_{22m} - E_D'}{E_{RT}'}\right)\left(1 + \frac{S_{11m} - E_D}{E_{RT}} E_S\right) - E_L'\left(\frac{S_{21m} - E_X}{E_{TT}}\right)\left(\frac{S_{12m} - E_X'}{E_{TT}'}\right)}{\left(1 + \frac{S_{11m} - E_D}{E_{RT}} E_S\right)\left(1 + \frac{S_{22m} - E_D'}{E_{RT}'} E_S'\right) - E_L' E_L\left(\frac{S_{21m} - E_X}{E_{TT}}\right)\left(\frac{S_{12m} - E_X'}{E_{TT}'}\right)}$$

Source: www.keysight.com

Measurement Uncertainty

https://www.ametektest.com

Measurement Uncertainty

The accuracy of S-parameter measurements is affected by the following quantities:

- Characterization of calibration standards
- VNA noise floor and trace noise
- VNA non-linearity
- VNA drift
- Isolation (cross-talk)
- Test port cable stability
- Connection repeatability

Measurement Uncertainty

Characterization of calibration standards

Usually the dominant source of uncertainty in a VNA measurement are associated with characterizations of calibration standards.

Calibration standards are characterized using primary or calibrated traceable calibration standards.

Measurement Uncertainty

VNA noise floor and trace noise

Noise denotes random signal fluctuations, which are characteristic of all electronic circuits.

For VNA measurements two types of noise are distinguished.

Noise floor denotes random fluctuations in the absence of a deterministic signal.

Trace noise denotes random fluctuations of the measurement result. When trace noise is far above the noise floor, it is proportional to the measured value, i.e., it is a constant fraction of the result.

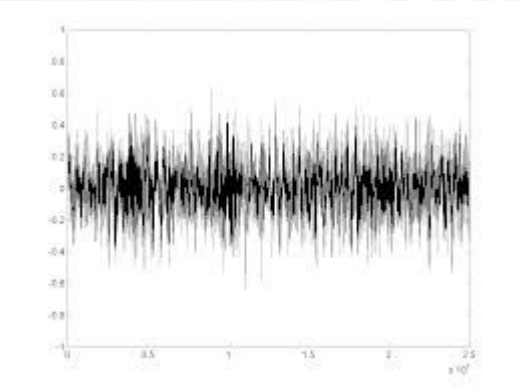

Measurement Uncertainty

VNA non-linearity

The term VNA non-linearity, sometimes also called dynamic accuracy, denotes deviations from this behavior. VNA non-linearity combines effects from different components: amplifiers, filters, ADC non-linearities, etc.

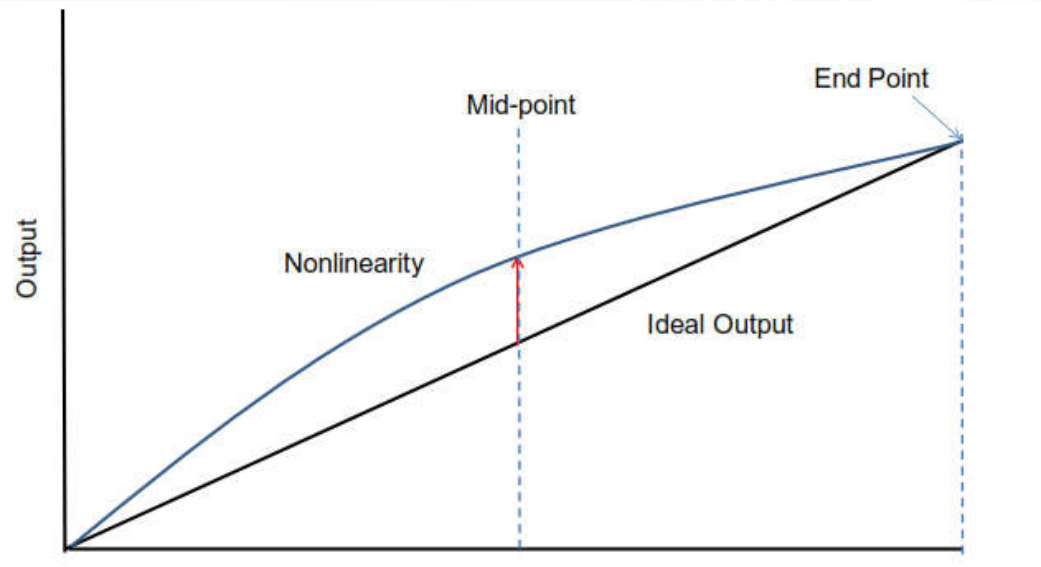

Measurement Uncertainty

VNA drift

Drift in VNA measurements occurs due to temperature changes and resulting relaxation effects.

These effects lead to changes in the electrical length of signal paths and to changes in the performance of couplers, receivers, and other components.

Some of the dielectric materials used in test port cables are phase sensitive to temperature changes.

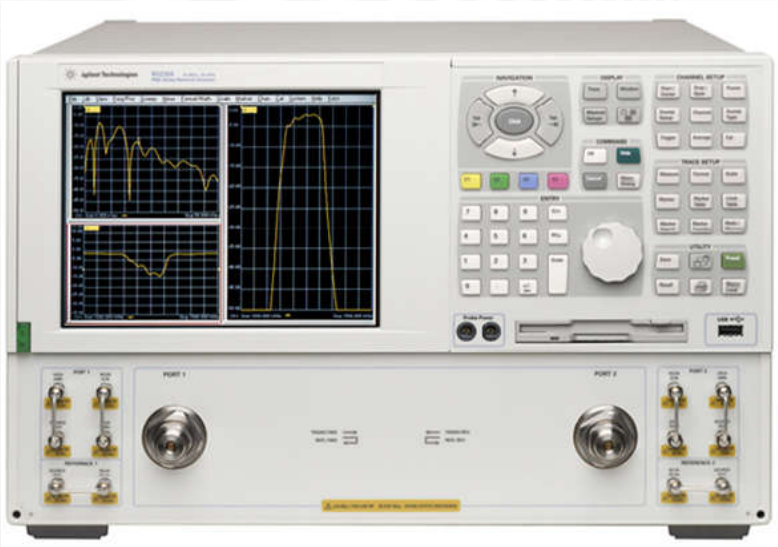

Measurement Uncertainty

Isolation (cross-talk)

Isolation is represented by error coefficients in VNA error models.

It is generally because of minor importance in coaxial measurements with modern VNAs.

For older VNAs it is known that it affects measurements of large attenuation to the extent that a correction needs to be applied.

Measurement Uncertainty

Test port cable stability

Test port cables are sensitive to temperature changes, movement and other mechanical influences.

This sometimes addresses an unavoidable movement of test port cables.

Measurement Uncertainty

Connection repeatability

Deviations from ideal connector geometry lead to mechanical stress and unwanted deformations when mating connectors.

This causes changes in electrical behavior for re-connections under different connector orientations.

This effect is depend on each individual combination of connector pairs.

The EMPIR initiative is co-funded by the European Union's Horizon 2020 research and innovation programme and the EMPIR Participating States

15RPT01 RFMicrowave
Development of RF and Microwave Metrology Capability

Thanks for attention!