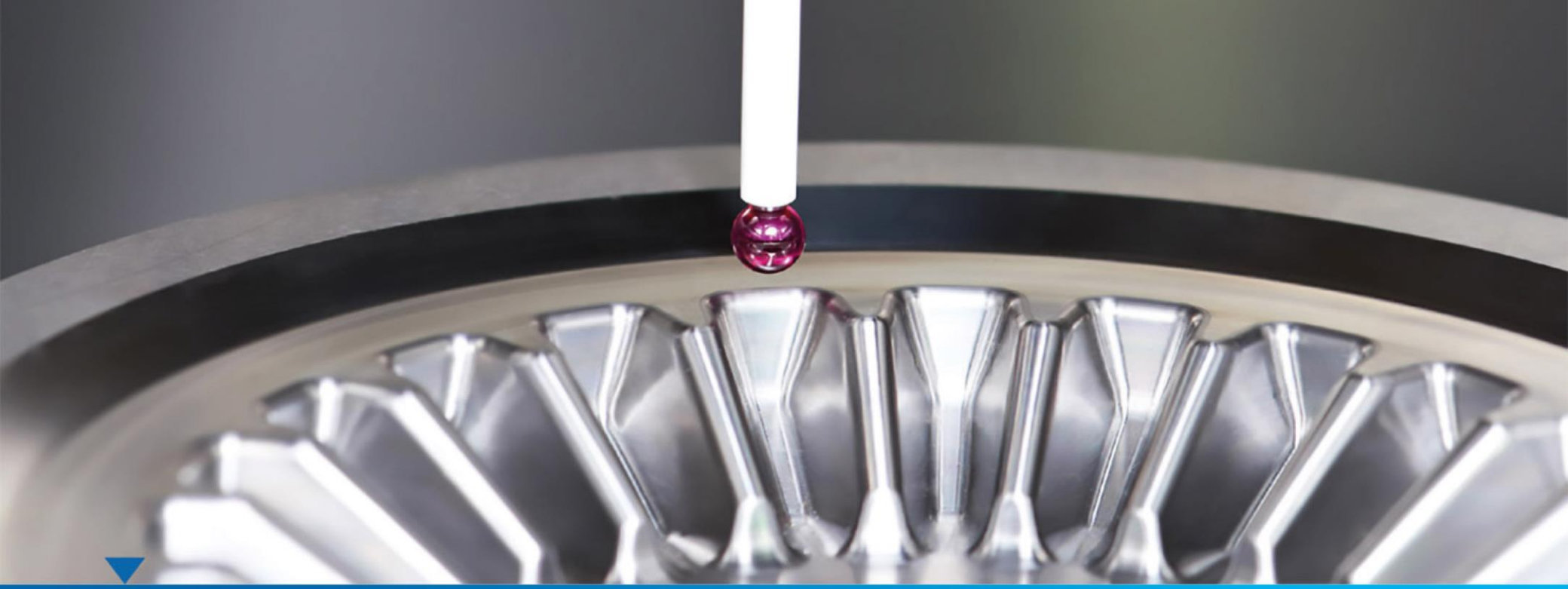

Calibration Factor Measurements

Jan Grajciar

CZECH METROLOGY INSTITUTE

Dept. of primary metrology of RF electrical quantities
Czech Metrology Institute, Prague, Czech Republic
jgrajciar@cmi.cz

Contents

- Introduction
- Methods
- Practical Hints
- Uncertainty Evaluation

Introduction

Power Sensor Calibration

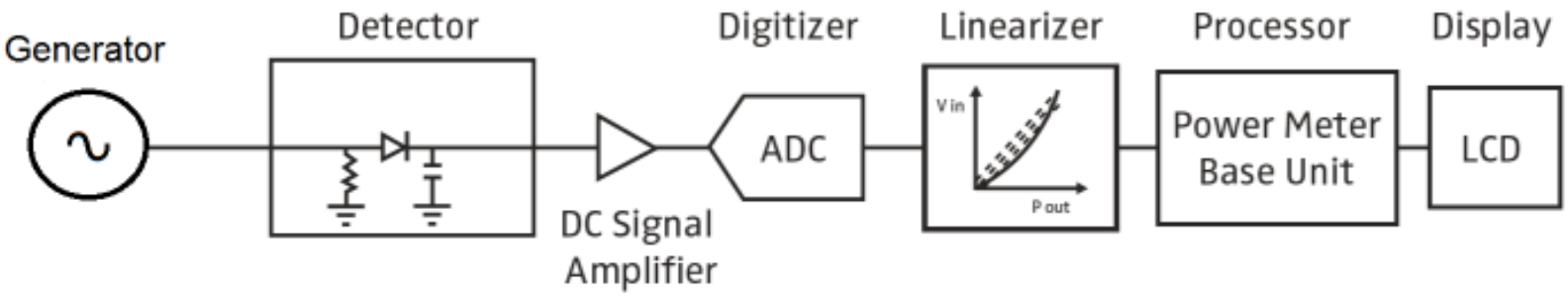

1. reflection coefficient
2. linearity
3. frequency response

Direct Comparison Method

Definition

$$CF = \eta_e(1 - |\Gamma|^2) \qquad CF = \frac{P_{DC,substitution}}{P_i}$$

- calibration factor used to describe both the eff. efficiency and the mismatch
- calibration of RF sensor is transferring the eff. efficiency or cal. factor from
  - a primary standard to a secondary standard (NMI ► NMI)
  - a secondary standard to a reference standard (NMI ► secondary lab.)
  - a reference standard to a power sensor (secondary lab. ► industry)
- traceability: unbroken chain of comparisons from the standards of lower level to the primary standard
- calibration factor is typically frequency dependent and can be stored in an EEPROM memory of the sensor after calibration

Contents

- Introduction
- Methods
- Practical Hints
- Uncertainty Evaluation

Direct Comparison Method

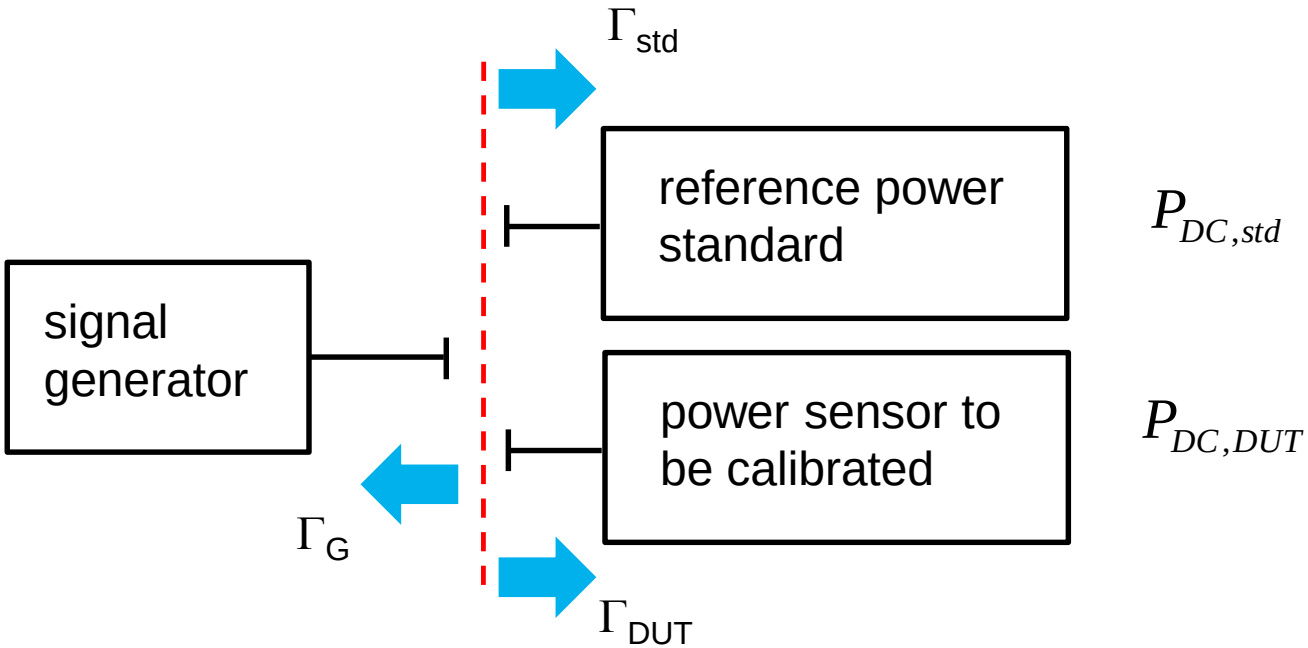

$$CF_{DUT} = CF_{std}\frac{P_{DC,DUT}}{P_{DC,std}}\frac{|1-\Gamma_G\Gamma_{DUT}|^2}{|1-\Gamma_G\Gamma_{std}|^2}$$

Direct Comparison Method

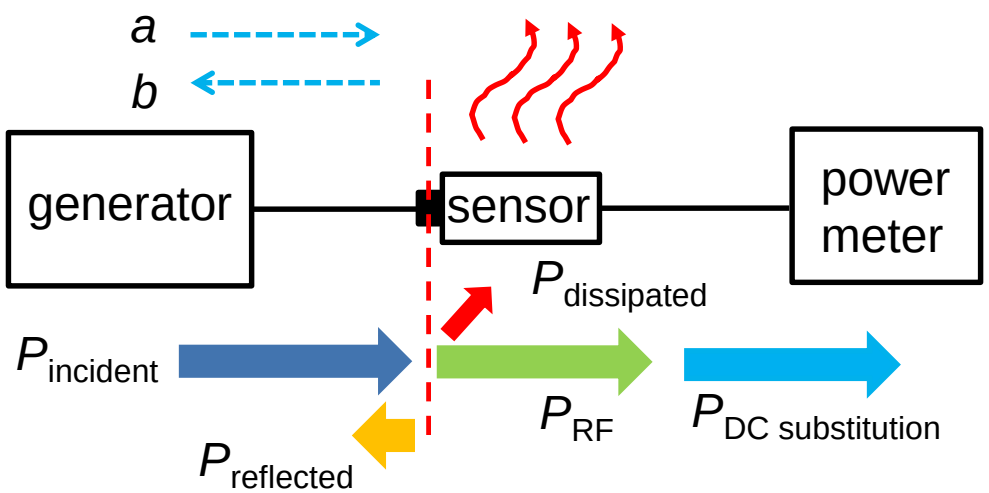

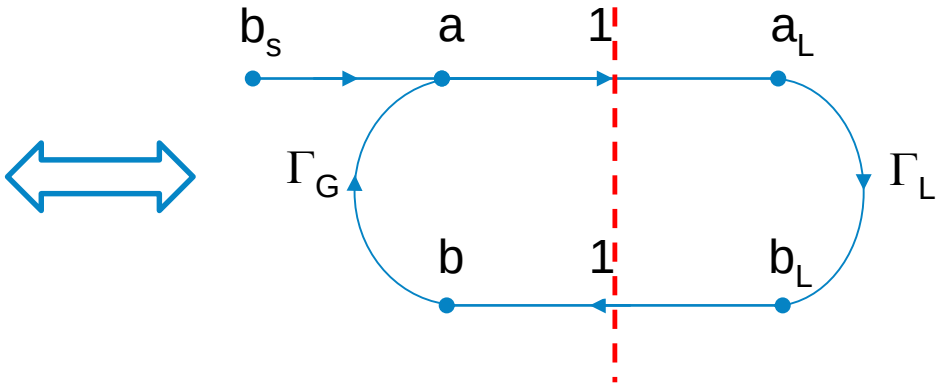

$$P_i = \frac{|a|^2}{Z_0} \qquad P_r = \frac{|b|^2}{Z_0} \qquad \Gamma = \frac{|b|}{|a|} \qquad P_{Z_0} = \frac{|b_s|^2}{Z_0}$$

- general mismatch between generator and load

$$P_i = P_{Z_0} \frac{1}{|1 - \Gamma_G \Gamma_L|^2} \qquad P_r = P_{Z_0} \frac{\Gamma_L^2}{|1 - \Gamma_G \Gamma_L|^2}$$

Direct Comparison Method

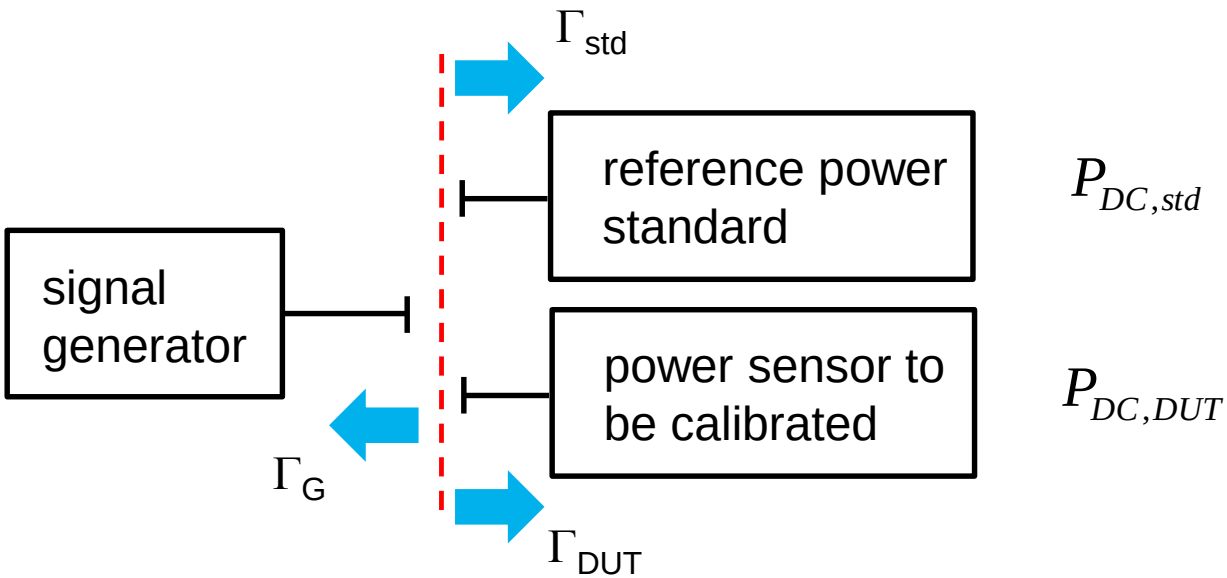

- incident power :

$$P_{i,std} = P_{Z_0} \frac{1}{|1 - \Gamma_G \Gamma_{std}|^2}$$

$$P_{i,DUT} = P_{Z_0} \frac{1}{|1 - \Gamma_G \Gamma_{DUT}|^2}$$

- transfer of the calibration factor :

$$\frac{CF_{DUT}}{CF_{std}} = \frac{\frac{P_{DC,DUT}}{P_{i,DUT}}}{\frac{P_{DC,std}}{P_{i,std}}}$$

Direct Comparison Method

- transfer of the calibration factor CF_{std} from the reference standard to the calibration factor CF_{DUT} of the DUT power sensor :

$$CF_{DUT} = CF_{std} \frac{P_{DC,DUT}}{P_{DC,std}} \frac{|1 - \Gamma_G \Gamma_{DUT}|^2}{|1 - \Gamma_G \Gamma_{std}|^2}$$

Advantages

- a very simple method
- only two devices are needed

Disadvantages

- generator repeatability
- generator time stability
- difficult to measure reflection coefficient of a generator (nonlinear behavior)
  ► equations derived using linear network theory do not work

$$P_i = P_{Z_0} \frac{1}{|1 - \Gamma_G \Gamma_{DUT}|^2}$$

Direct Comparison Method

- transfer of the calibration factor CF_{std} from the reference standard to the calibration factor CF_{DUT} of the DUT power sensor :

$$CF_{DUT} = CF_{std} \frac{P_{DC,DUT}}{P_{DC,std}} \cancel{\frac{|1-\Gamma_G \Gamma_{DUT}|^2}{|1-\Gamma_G \Gamma_{std}|^2}}$$

Advantages

- a very simple method
- only two devices are needed

Disadvantages

- generator repeatability
- generator time stability
- difficult to measure reflection coefficient of a generator (nonlinear behavior)
  ► equations derived using linear network theory do not work

$$P_i = P_{Z_0} \cancel{\frac{1}{|1-\Gamma_G \Gamma_{DUT}|^2}}$$

Direct Comparison Method

Accuracy Improvement

- inserting passive components improves source mismatch effect and the DUT mismatch
  - a) **attenuator** - improves mismatch, but decreases dynamic range
  - b) **power splitter** - holds effective source output power constant

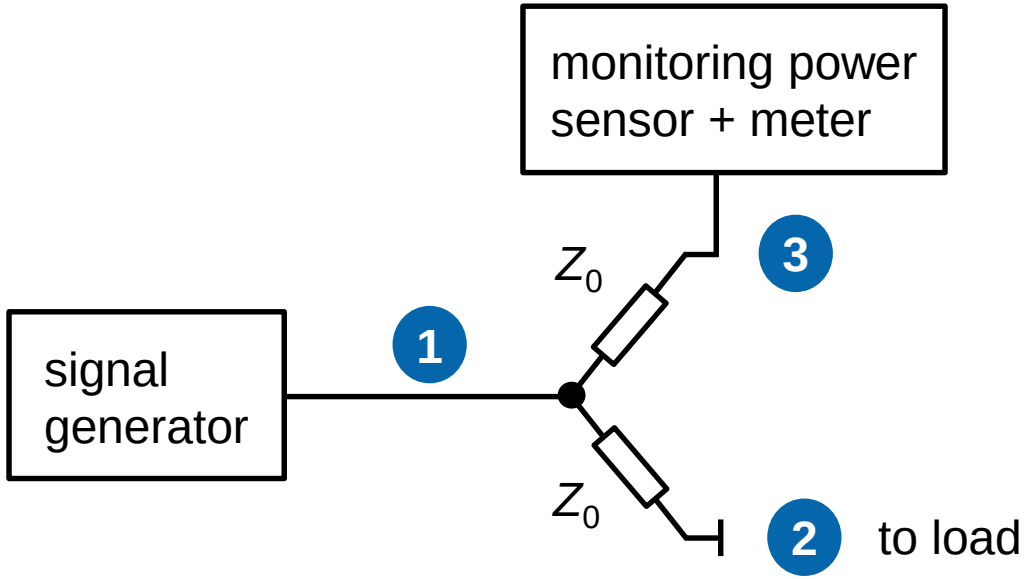

Levelled Source Method

- monitoring and levelling power at port 2 through port 3
  - ► port 2 of the power splitter becomes the effective source output

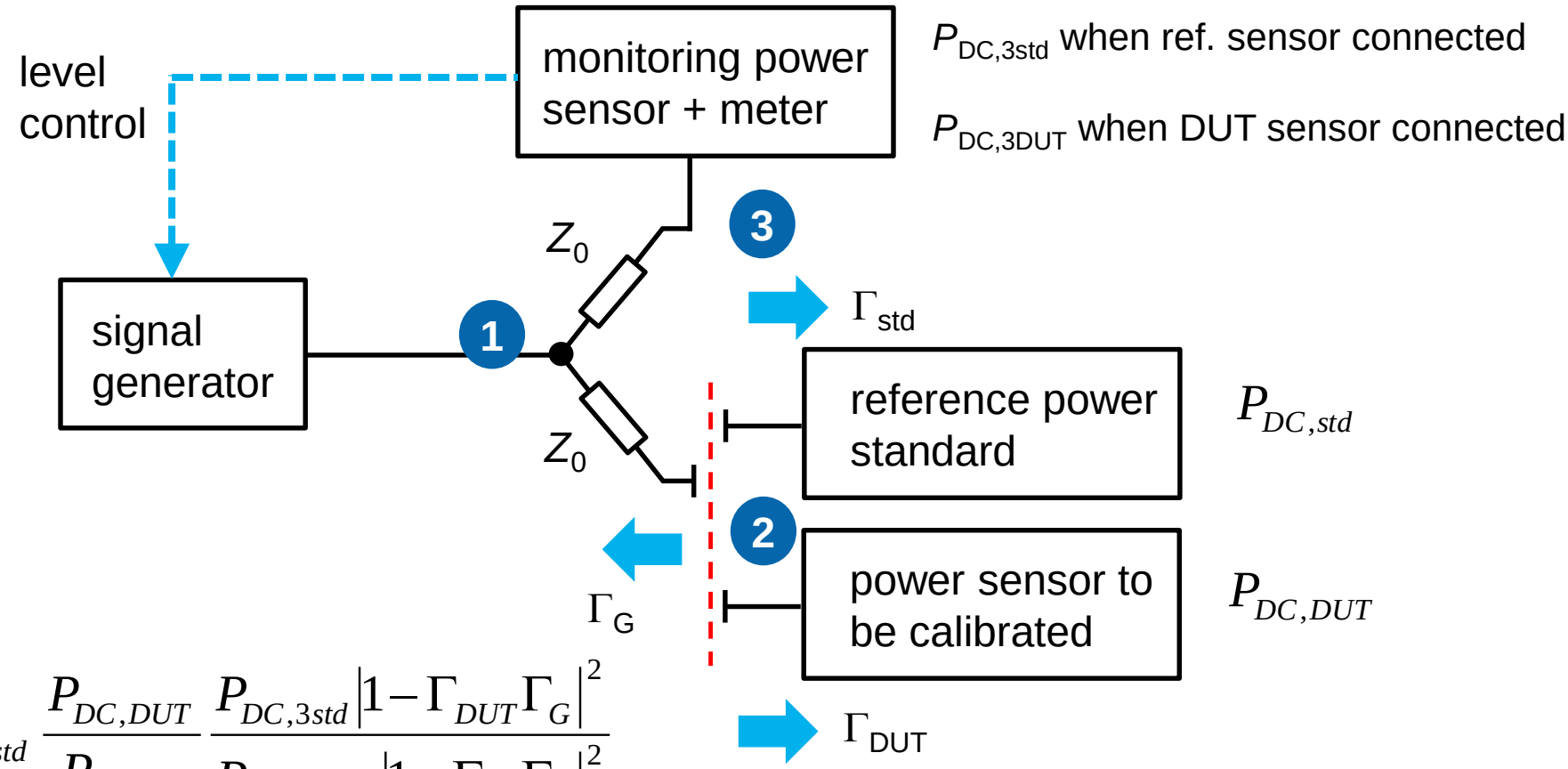

$$CF_{DUT} = CF_{std} \frac{P_{DC,DUT}}{P_{DC,std}} \frac{P_{DC,3std}\left|1-\Gamma_{DUT}\Gamma_G\right|^2}{P_{DC,3DUT}\left|1-\Gamma_{std}\Gamma_G\right|^2}$$

Levelled Source Method

- power splitter's effective source match

$$\Gamma_{EG2} = S_{22} - S_{21}\frac{S_{32}}{S_{31}}$$

- resistive power splitter S-parameters (Z_0 = 50 W)

$$S = \begin{bmatrix} 0 & 0.5 & 0.5 \\ 0.5 & 0.25 & 0.25 \\ 0.5 & 0.25 & 0.25 \end{bmatrix}$$

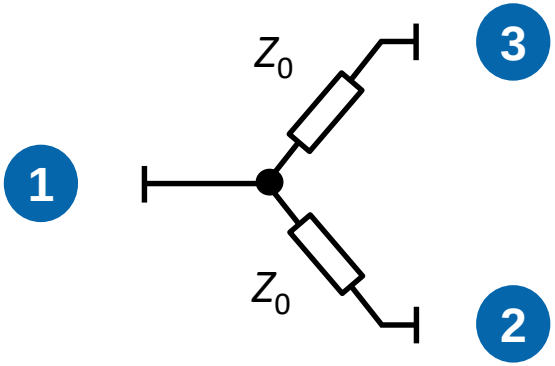

Advantages

- broadband (DC to GHz)
- better impedance match than coaxial couplers

Disadvantages

- temperature dependent properties
- 6 dB loss (high dissipated power in high-power measurements)

Levelled Source Method

- instead of the power splitter, one can use other types of coupling devices (large powers, waveguides, ...)

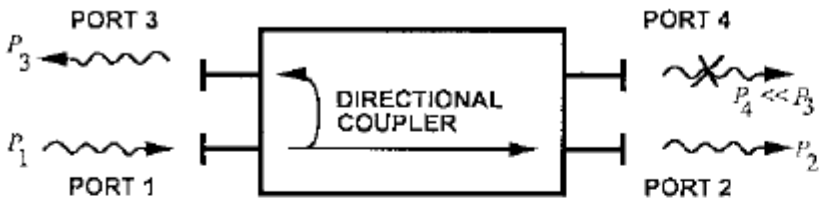

schematic

microstrip

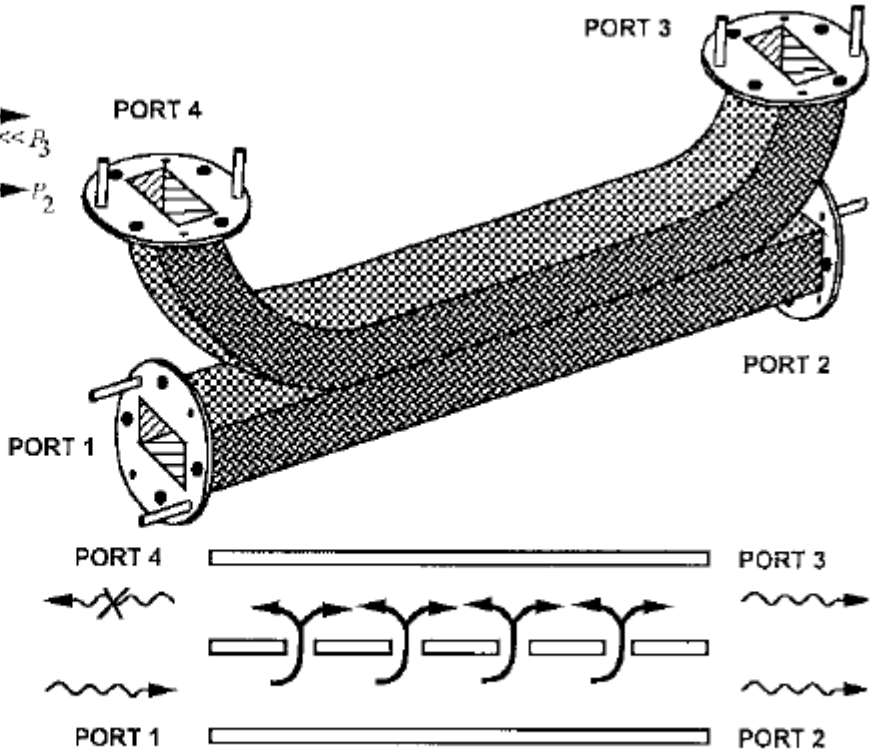

waveguide

Levelled Source Method

- calculating Γ_{EG} directly from S parameters sensitive to small measurement errors, alternative measurements proposed:

J. R. Juroshek: NIST 0.05-50 GHz direct comparison power calibration system, *Conference on Precision Electromagnetic Measurements (CPEM2000)*, pp. 166-167, 14-19 May 2000, Sydney, Australia

K. Yhland, J. Stenarson: Measurement Uncertainty in Power Splitter Effective Source Match, *IEEE Trans. on Instrum. Meas.,* pp. 669-672, Vol. 56, No. 2, April 2007

K. Shimaoka: A new method for measuring accurate equivalent source reflection coefficient of three-port devices, *Conference on Precision Electromagnetic Measurements (CPEM2010)*, pp. 589-590, 13-18 June 2010, Daejeon, Korea

Levelled Source Method

- monitoring and levelling power at port 2 through port 3
  - ► port 2 of the power splitter becomes the effective source output

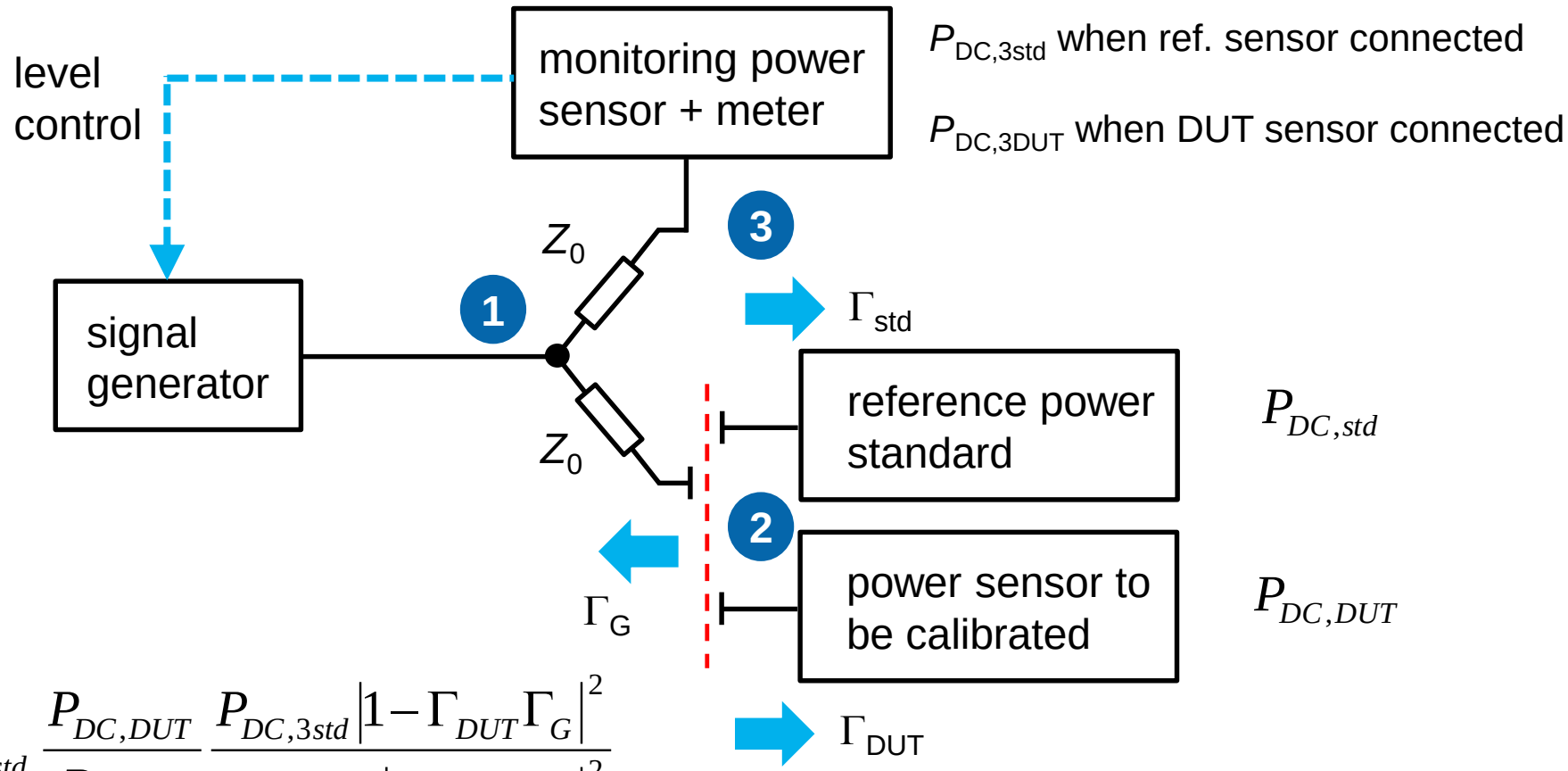

$$CF_{DUT} = CF_{std} \frac{P_{DC,DUT}}{P_{DC,std}} \frac{P_{DC,3std}\left|1-\Gamma_{DUT}\Gamma_G\right|^2}{P_{DC,3DUT}\left|1-\Gamma_{std}\Gamma_G\right|^2}$$

Levelled Source Method

HP Test & Measurement
App. note 95-1

Mathematical Model

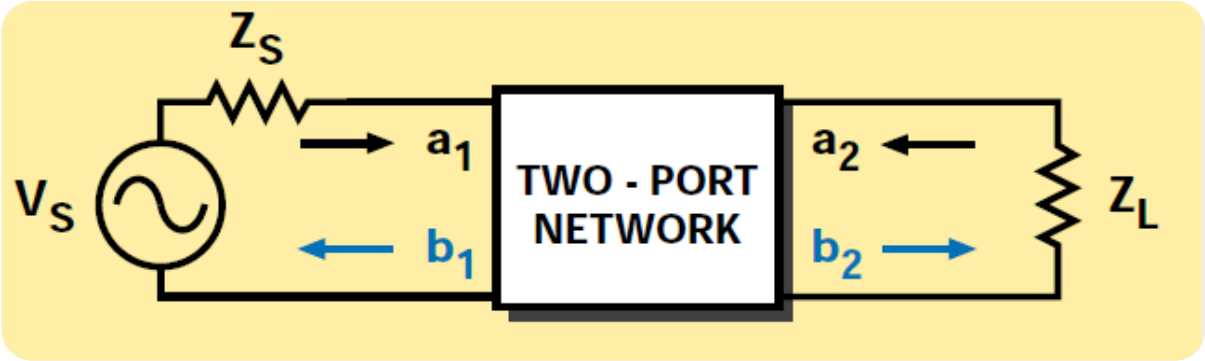

incident waves a_1, a_2, reflected waves b_1, b_2

$$a_1 = \frac{V_1 + I_1 Z_0}{2\sqrt{Z_0}} \qquad b_1 = \frac{V_1 - I_1 Z_0}{2\sqrt{Z_0}}$$

$$a_2 = \frac{V_2 + I_2 Z_0}{2\sqrt{Z_0}} \qquad b_2 = \frac{V_2 - I_2 Z_0}{2\sqrt{Z_0}}$$

$$\left.\right\} \quad \begin{aligned} b_1 &= s_{11} a_1 + s_{12} a_2 \\ b_2 &= s_{12} a_1 + s_{22} a_2 \end{aligned}$$

Levelled Source Method

HP Test & Measurement
App. note 95-1

Flow Graphs

- each port represented by two nodes

a_n = wave coming into the device from another device at port *n*
b_n = wave leaving the device at port *n*

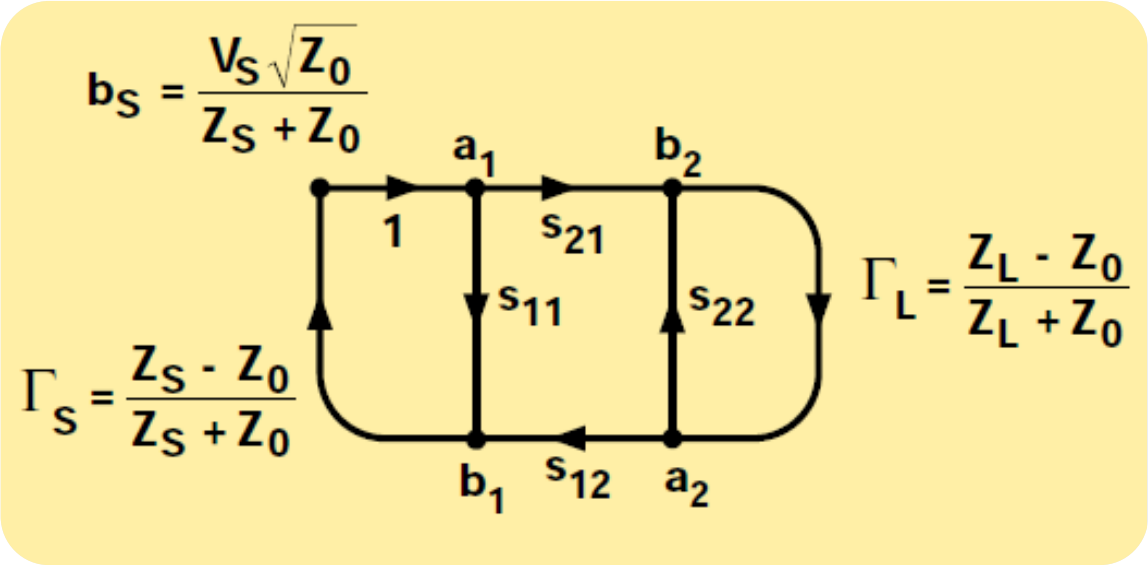

$$s_{11} = \frac{b_1}{a_1}\Big|_{a_2=\Gamma_L b_2=0} \qquad \text{for } \Gamma_L = 0 \ (Z_L = Z_0)$$

Levelled Source Method

Topographical Rules

G. H. Bryant: *Principles of Microwave Measurements*, Peter Peregrinus 1993

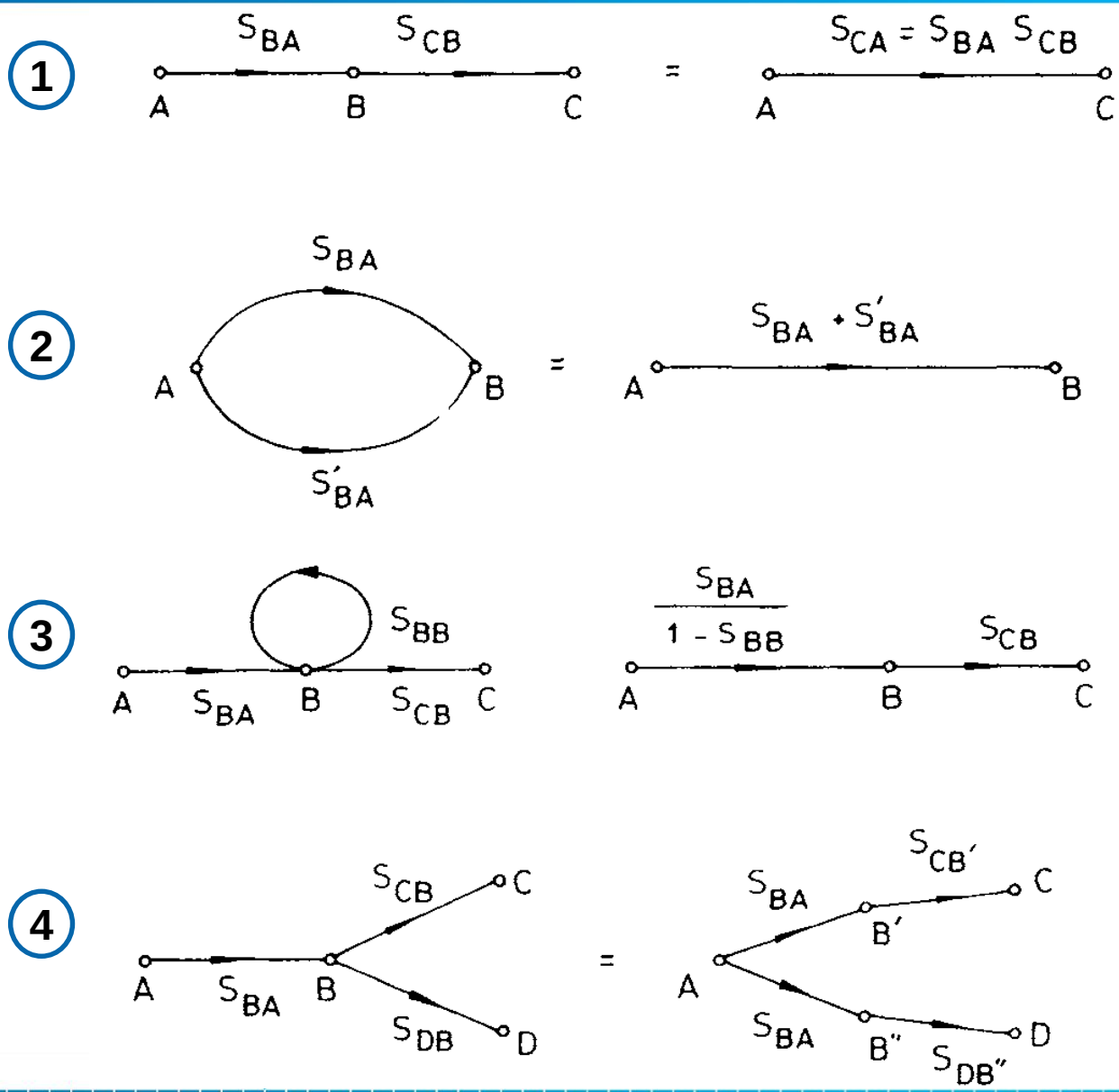

Levelled Source Method

Mason's Rule

- non-touching loop rule - simplified solution of any flow graph

$$T = \frac{\sum_k T_k \Delta_k}{\Delta}$$

non-touching loops = separate loops that do not touch at any node of the network

T_k = path gain of the kth forward path

Δ = 1 - Σ (all individual loop gains)
+ Σ (loop gain products of all possible combinations of 2 non-touching loops)
- Σ (loop gain pruducts of all possible combinations of 3 non-touching loops)
+ ...

Δ_k = the value of Δ non touching the kth forward path

Levelled Source Method

Flow Graph of A Real Resistive Splitter

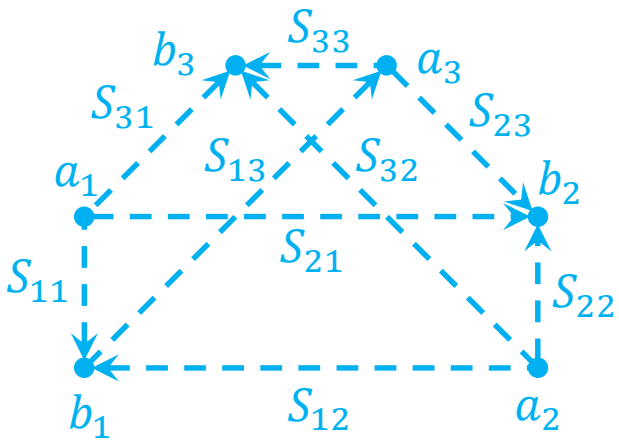

Q. Zhang *et al.*: Direct Comparison Transfer of Microwave Power Sensor Calibration with an Adaptor: Modelling and Evaluation, *Progress in Electromagnetics Research Letters,* Vol. 38, pp. 25-34, 2013

Levelled Source Method

Flow Graph of A Real Resistive Splitter

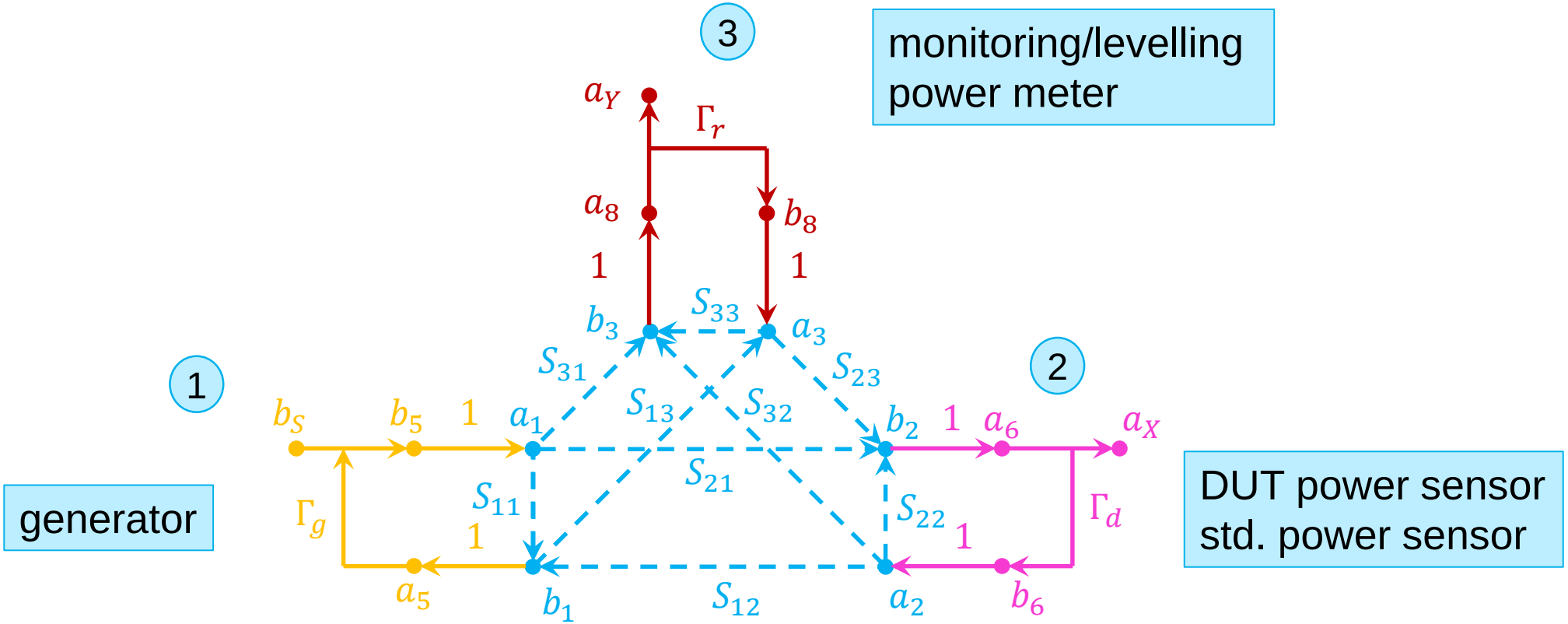

Q. Zhang *et al.*: Direct Comparison Transfer of Microwave Power Sensor Calibration with an Adaptor: Modelling and Evaluation, *Progress in Electromagnetics Research Letters,* Vol. 38, pp. 25-34, 2013

Levelled Source Method

- power P_{DC} measured by a sensor (derivation using flow graphs)

$$P_{DC} = |b_i|^2 CF$$

- calibration factor ($\Gamma = 0$)

$$CF_{DUT} = CF_{std} \frac{P_{DC,DUT}}{P_{DC,std}}$$

ratio between powers to be derived using the flow graph method

Levelled Source Method

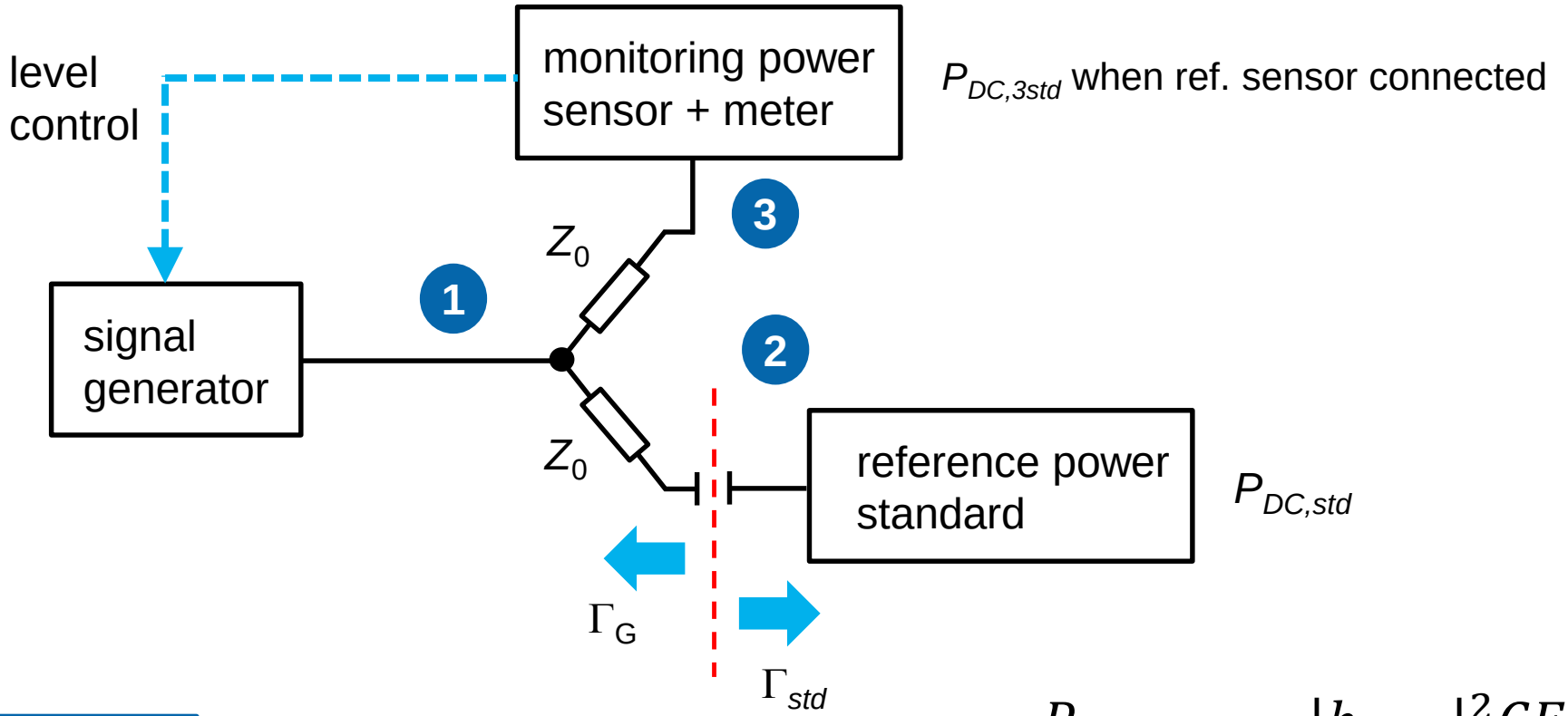

step 1

$$\frac{P_{DC,std}}{P_{DC,3std}} = \frac{|b_{2std}|^2 CF_{std}}{|b_{3std}|^2 CF_{3std}}$$

Levelled Source Method

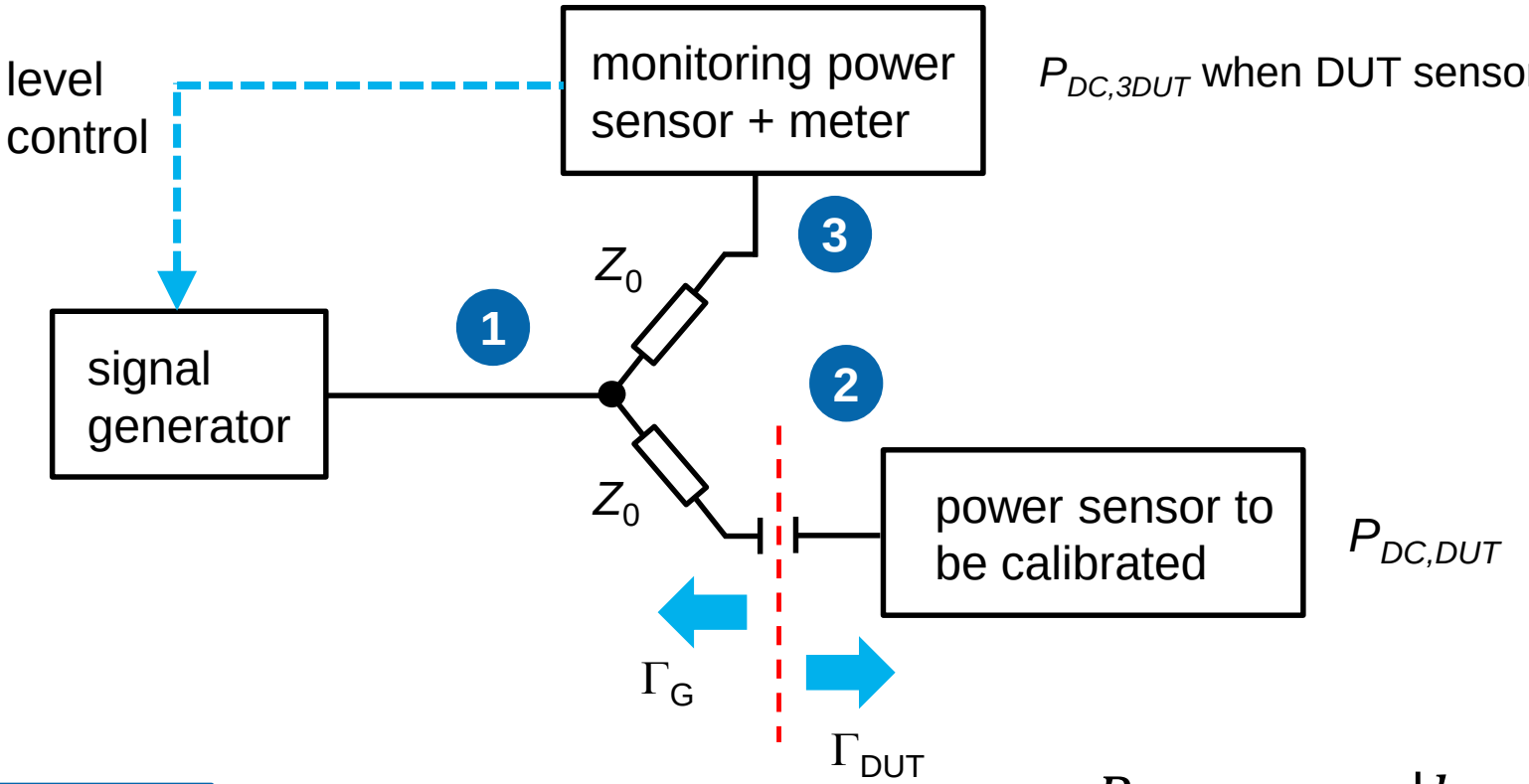

step 2

$$\frac{P_{DC,DUT}}{P_{DC,3DUT}} = \frac{|b_{2DUT}|^2 CF_{DUT}}{|b_{3DUT}|^2 CF_{3DUT}}$$

Levelled Source Method

- port 3 connected to the same sensor, i.e.,

$$CF_{3std} = CF_{3DUT}$$

$$\frac{P_{DC,std}}{P_{DC,3std}} = \frac{|b_{2std}|^2 CF_{std}}{|b_{3std}|^2 CF_{3std}} \qquad \frac{P_{DC,DUT}}{P_{DC,3DUT}} = \frac{|b_{2DUT}|^2 CF_{DUT}}{|b_{3DUT}|^2 CF_{3DUT}}$$

$$CF_{DUT} = CF_{std} \frac{P_{DC,DUT}}{P_{DC,std}}$$

$$CF_{DUT} = CF_{std} \frac{P_{DC,DUT}}{P_{DC,3DUT}} \frac{|b_{3DUT}|^2}{|b_{2DUT}|^2} \frac{P_{DC,3std}}{P_{DC,std}} \frac{|b_{2std}|^2}{|b_{3std}|^2}$$

Levelled Source Method

- port 3 connected to the same sensor, i.e.,

$$CF_{3std} = CF_{3DUT}$$

$$\frac{P_{DC,std}}{P_{DC,3std}} = \frac{|b_{2std}|^2 CF_{std}}{|b_{3std}|^2 CF_{3std}} \qquad \frac{P_{DC,DUT}}{P_{DC,3DUT}} = \frac{|b_{2DUT}|^2 CF_{DUT}}{|b_{3DUT}|^2 CF_{3DUT}}$$

$$CF_{DUT} = CF_{std} \frac{P_{DC,DUT}}{P_{DC,std}}$$

$$CF_{DUT} = CF_{std} \frac{P_{DC,DUT}}{P_{DC,3DUT}} \frac{|b_{3DUT}|^2}{|b_{2DUT}|^2} \frac{P_{DC,3std}}{P_{DC,std}} \frac{|b_{2std}|^2}{|b_{3std}|^2}$$

Levelled Source Method

- port 3 connected to the same sensor, i.e.,

$$CF_{3std} = CF_{3DUT}$$

$$\frac{P_{DC,std}}{P_{DC,3std}} = \frac{|b_{2std}|^2 CF_{std}}{|b_{3std}|^2 CF_{3std}} \qquad \frac{P_{DC,DUT}}{P_{DC,3DUT}} = \frac{|b_{2DUT}|^2 CF_{DUT}}{|b_{3DUT}|^2 CF_{3DUT}}$$

$$CF_{DUT} = CF_{std} \frac{P_{DC,DUT}}{P_{DC,std}}$$

$$CF_{DUT} = CF_{std} \frac{P_{DC,DUT}}{P_{DC,3DUT}} \frac{|b_{3DUT}|^2}{|b_{2DUT}|^2} \frac{P_{DC,3std}}{P_{DC,std}} \frac{|b_{2std}|^2}{|b_{3std}|^2}$$

Levelled Source Method

path from port 2 (DUT/std sensor) to port 3 (levelling)

$$\frac{|b_{3DUT}|^2}{|b_{2DUT}|^2}, \frac{|b_{2std}|^2}{|b_{3std}|^2}$$

$$\frac{a_X}{a_Y} = \frac{a_X}{b_S}\frac{b_S}{a_Y} = \ldots \frac{|b_{2DUT}|^2}{|b_{3DUT}|^2} \, or \, \frac{|b_{2std}|^2}{|b_{3std}|^2}$$

$$T = \frac{\sum_k T_k \Delta_k}{\Delta}$$

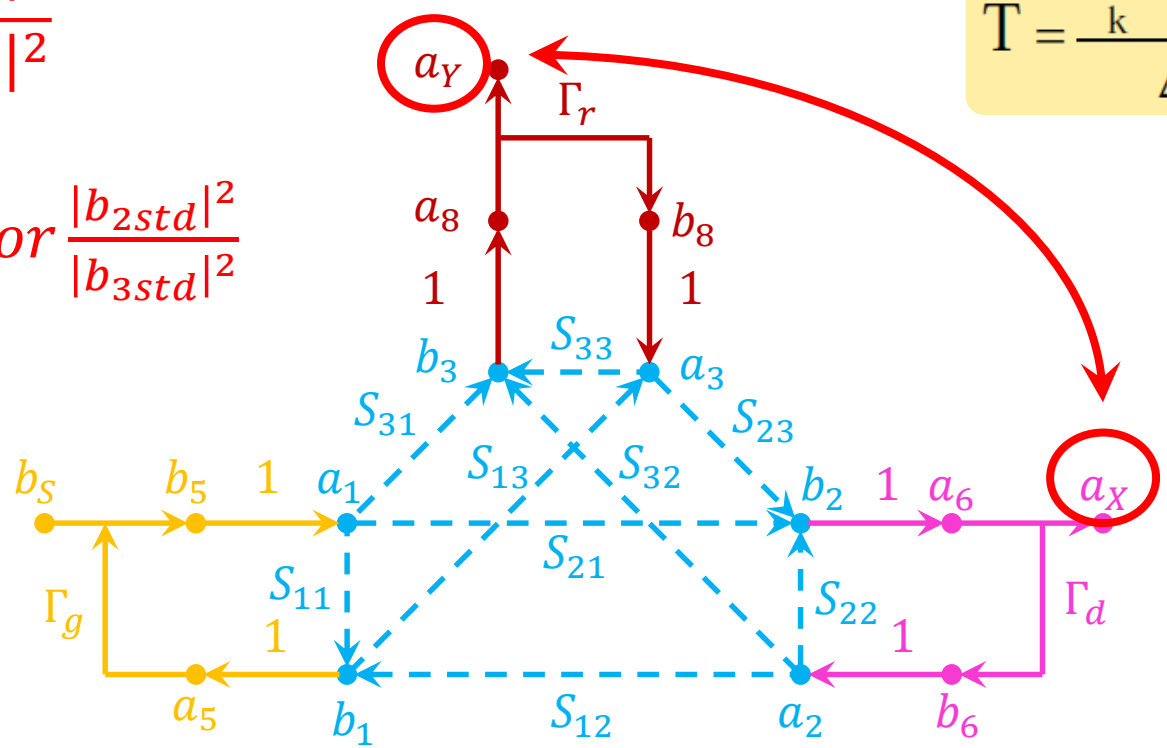

Mason's rule: find all direct paths, 1st order loops, 2nd order loops, ... and apply the rule

Levelled Source Method

path from port 2 (DUT/std sensor) to port 3 (levelling)

$$\frac{a_X}{a_Y} = \frac{a_X}{b_S}\frac{b_S}{a_Y}$$

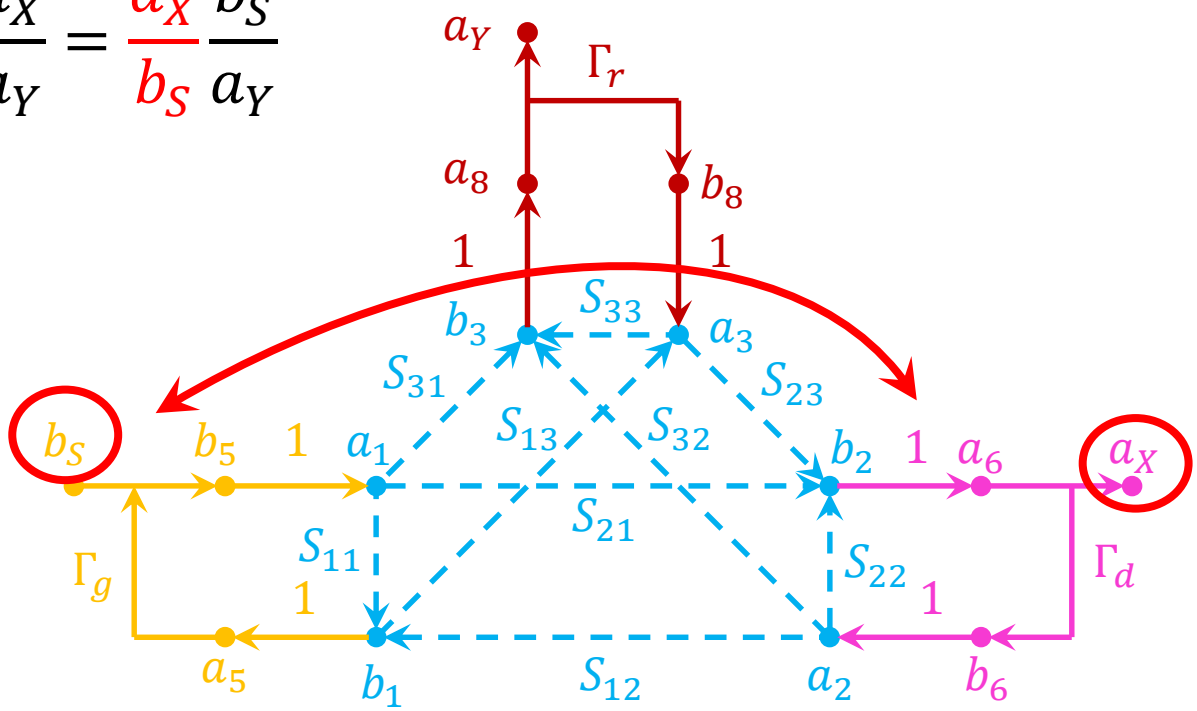

two paths from b_S to a_x:

$$P_1 = S_{21}$$
$$P_2 = S_{31}\Gamma_r S_{23}$$

transfer function

$$\frac{a_X}{b_S} = \frac{S_{21}[1-(\Gamma_r S_{33})]}{1-\sum L(1)+\sum L(2)-\sum L(3)+\cdots} + \frac{S_{31}\Gamma_r S_{23}[1-0]}{1-\sum L(1)+\sum L(2)-\sum L(3)+\cdots}$$

Levelled Source Method

path from port 2 (DUT/std sensor) to port 3 (levelling)

$$\frac{a_X}{a_Y} = \frac{a_X}{b_S}\frac{b_S}{a_Y}$$

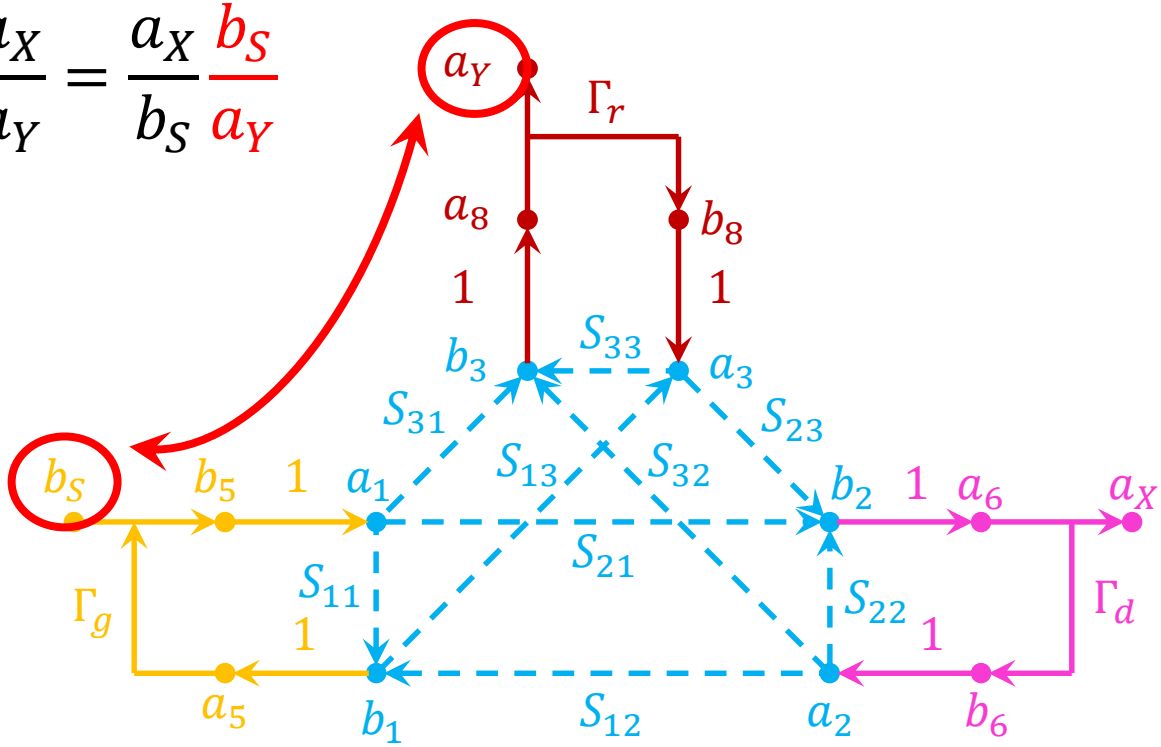

two paths from b_S to a_Y:

$$P_1 = S_{31}$$
$$P_2 = S_{21}\Gamma_d S_{32}$$

transfer function

$$\frac{a_Y}{b_S} = \frac{S_{31}[1-(\Gamma_d S_{22})]}{1-\sum L(1)+\sum L(2)-\sum L(3)+\cdots} + \frac{S_{21}\Gamma_d S_{32}[1-0]}{1-\sum L(1)+\sum L(2)-\sum L(3)+\cdots}$$

Levelled Source Method

path from port 2 (DUT/std sensor) to port 3 (levelling)

$$\frac{a_X}{a_Y} = \frac{a_X}{b_S}\frac{b_S}{a_Y} = \left[\frac{S_{21}(1-\Gamma_r S_{33}) + S_{31}\Gamma_r S_{23}}{S_{31}(1-\Gamma_d S_{22}) + S_{21}\Gamma_d S_{32}}\right]$$

$$= \frac{S_{21}}{S_{31}}\left[\frac{1-\Gamma_r\left(S_{33} - \frac{S_{31}S_{23}}{S_{21}}\right)}{1-\Gamma_d\left(S_{22} - \frac{S_{21}S_{32}}{S_{31}}\right)}\right]$$

$$\boldsymbol{\Gamma_{e2} = S_{22} - \frac{S_{21}S_{32}}{S_{31}}}$$

$$\boldsymbol{\Gamma_{e3} = S_{33} - \frac{S_{31}S_{23}}{S_{21}}}$$

$$\boldsymbol{\frac{a_X}{a_Y} = \left(\frac{S_{21}}{S_{31}}\right)\left(\frac{1-\Gamma_r\Gamma_{e3}}{1-\Gamma_d\Gamma_{e2}}\right)}$$

Levelled Source Method

path from port 2 (DUT/std sensor) to port 3 (levelling)

let $a_X = b_2$ and $a_Y = b_3$

$$\frac{b_2}{b_3} = \frac{a_X}{a_Y} = \left(\frac{S_{21}}{S_{31}}\right)\left(\frac{1-\Gamma_r\Gamma_{e3}}{1-\Gamma_d\Gamma_{e2}}\right)$$

$$CF_{DUT} = CF_{std}\frac{P_{DC,DUT}}{P_{DC,3DUT}}\frac{|b_{3DUT}|^2}{|b_{2DUT}|^2}\frac{P_{DC,3std}}{P_{DC,std}}\frac{|b_{2std}|^2}{|b_{3std}|^2}$$

after some manipulations

$$\boxed{CF_{DUT} = CF_{std}\frac{P_{DC,DUT}P_{DC,3std}}{P_{DC,3DUT}P_{DC,std}}\frac{|1-\Gamma_{DUT}\Gamma_{e2}|^2}{|1-\Gamma_{std}\Gamma_{e2}|^2}}$$

Levelled Source Method

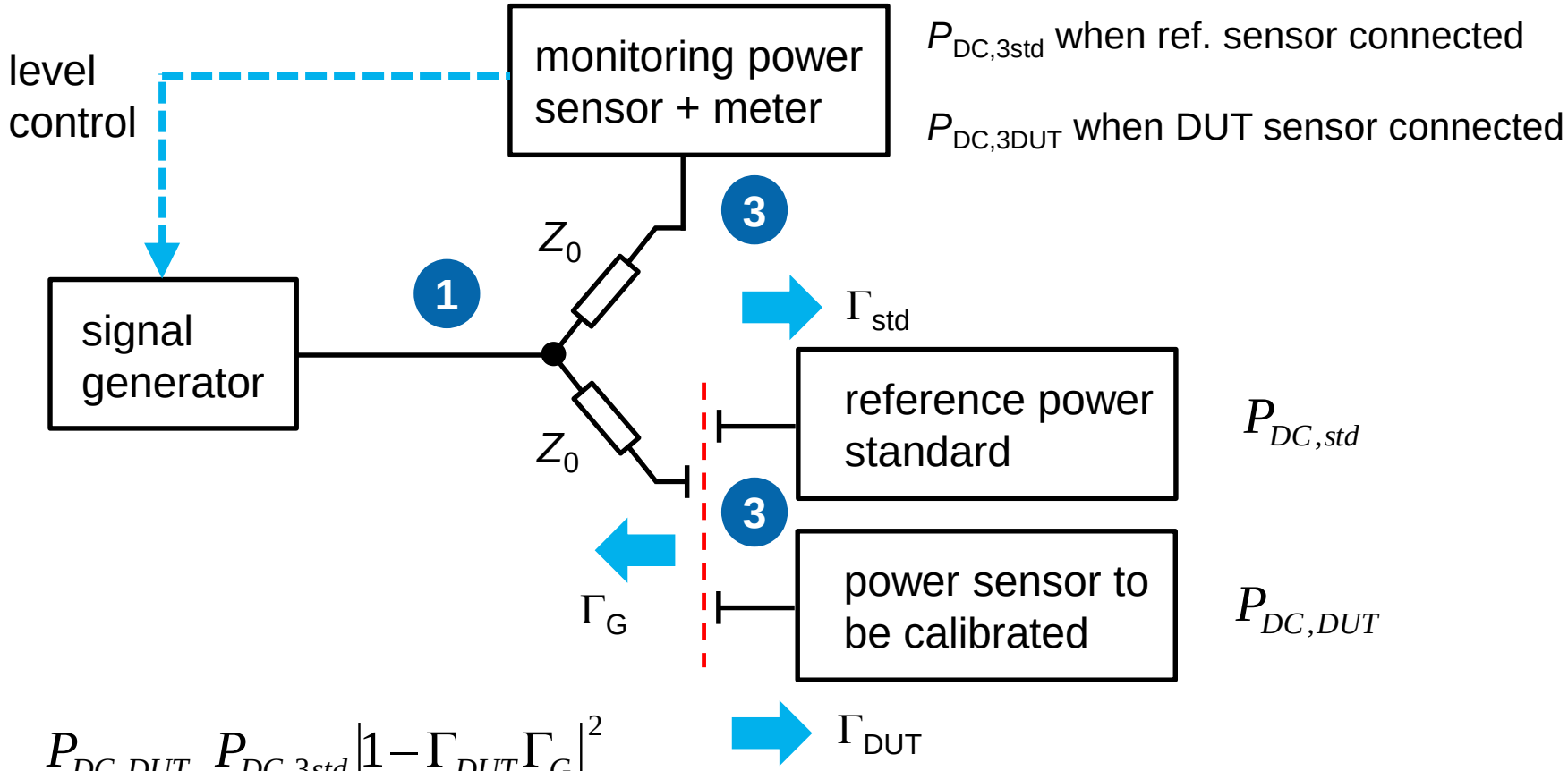

$$CF_{DUT} = CF_{std} \frac{P_{DC,DUT}}{P_{DC,std}} \frac{P_{DC,3std}\left|1-\Gamma_{DUT}\Gamma_G\right|^2}{P_{DC,3DUT}\left|1-\Gamma_{std}\Gamma_G\right|^2}$$

Levelled Source Method with Adpt / Att

problems

- DUT sensor may have an unmatched connector - adaptor has to be used
- diode sensors: above the square law, a solution is a mathematical correction, using an attenuator

mathematical model needed for removal of the adaptor / attenuator effect

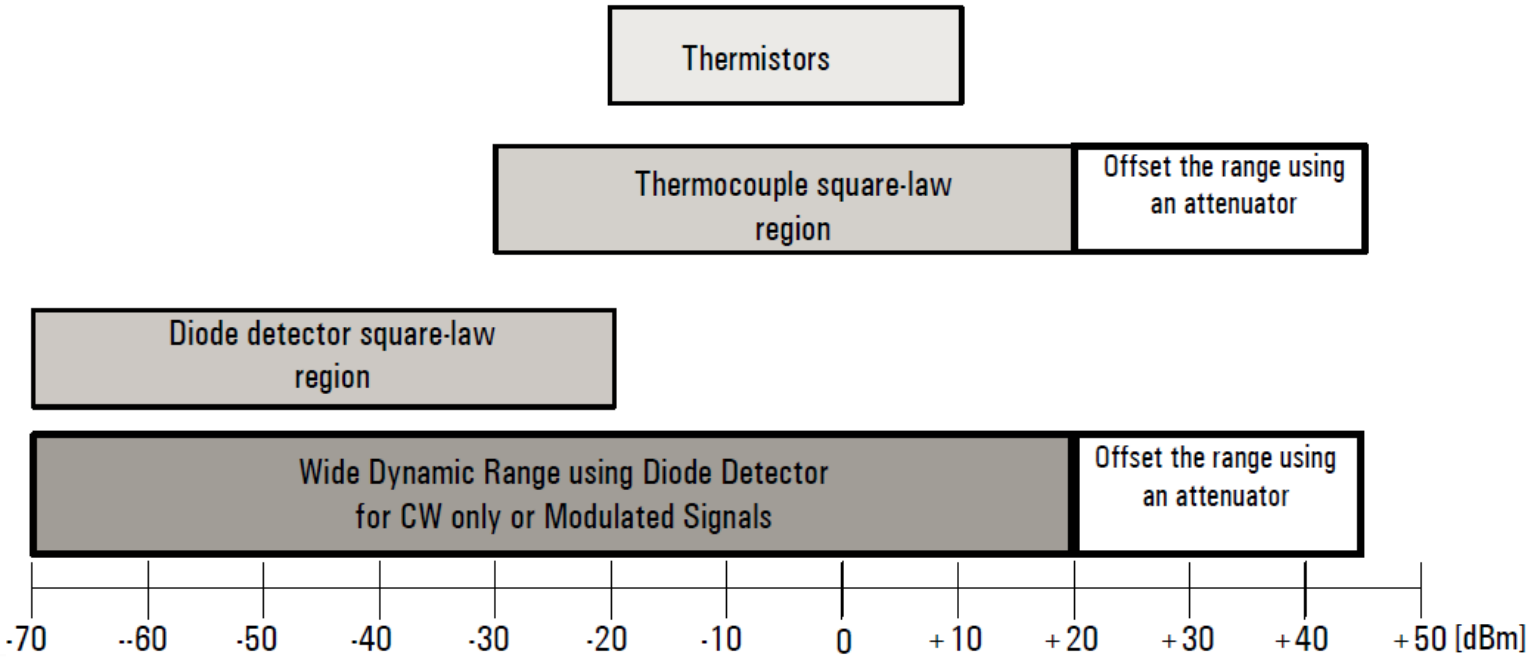

Levelled Source Method with Adpt / Att

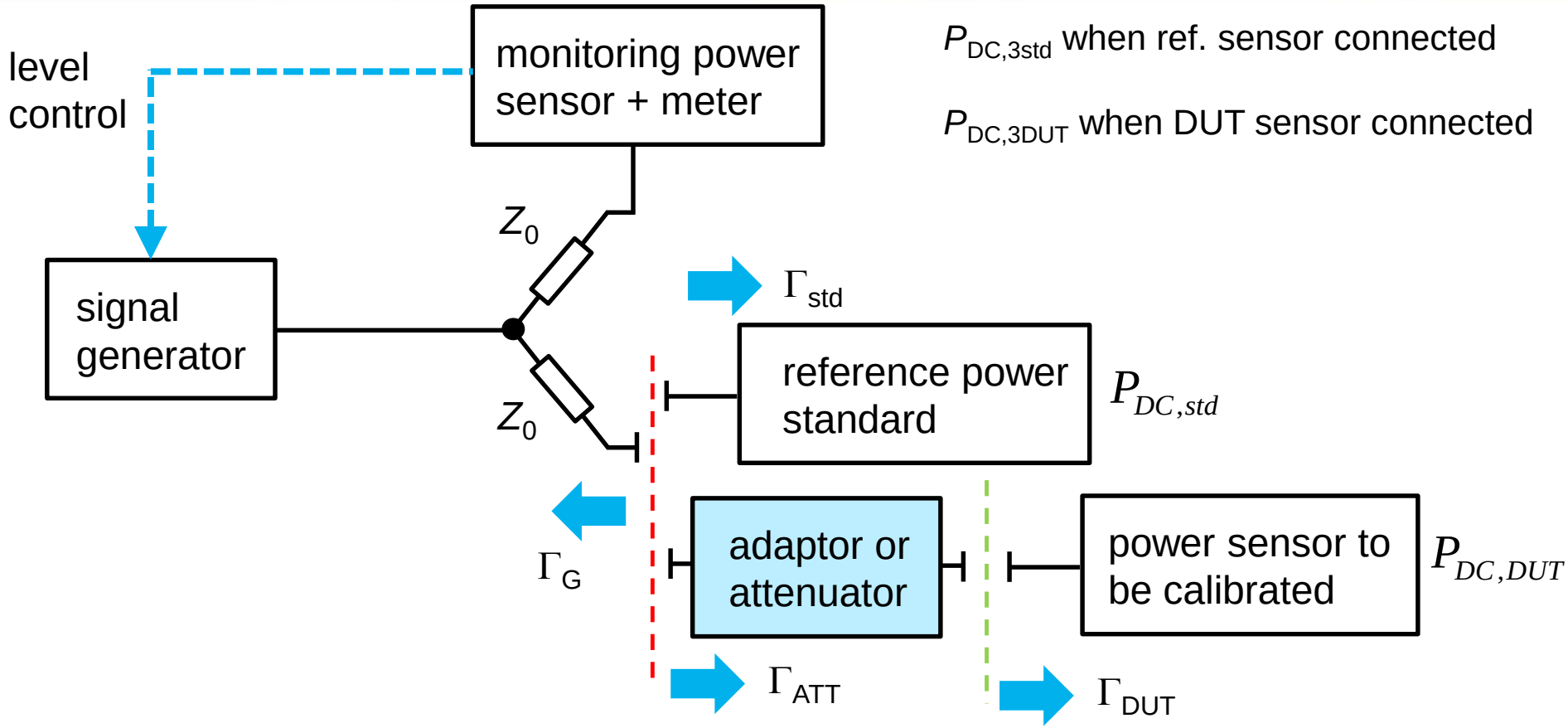

$$CF_{DUT} = CF_{std}\frac{P_{DC,DUT}}{P_{DC,3DUT}}\frac{P_{DC,3std}}{P_{DC,std}}\left|\frac{1}{S_{21A}}\right|^2\left|\frac{1-\Gamma_{DUT}S_{22A}-\Gamma_{e2}\Gamma_{A-DUT}}{(1-\Gamma_{std}\Gamma_{e2})}\right|^2$$

$$\Gamma_{A-DUT} = S_{11A} + \Gamma_{DUT}S_{21A}S_{12A} - \Gamma_{DUT}S_{22A}S_{11A}$$

Levelled Source Method with Adpt / Att

Flow Graph of A Real Resistive Splitter with an adaptor/attenuator

monitoring/levelling power meter

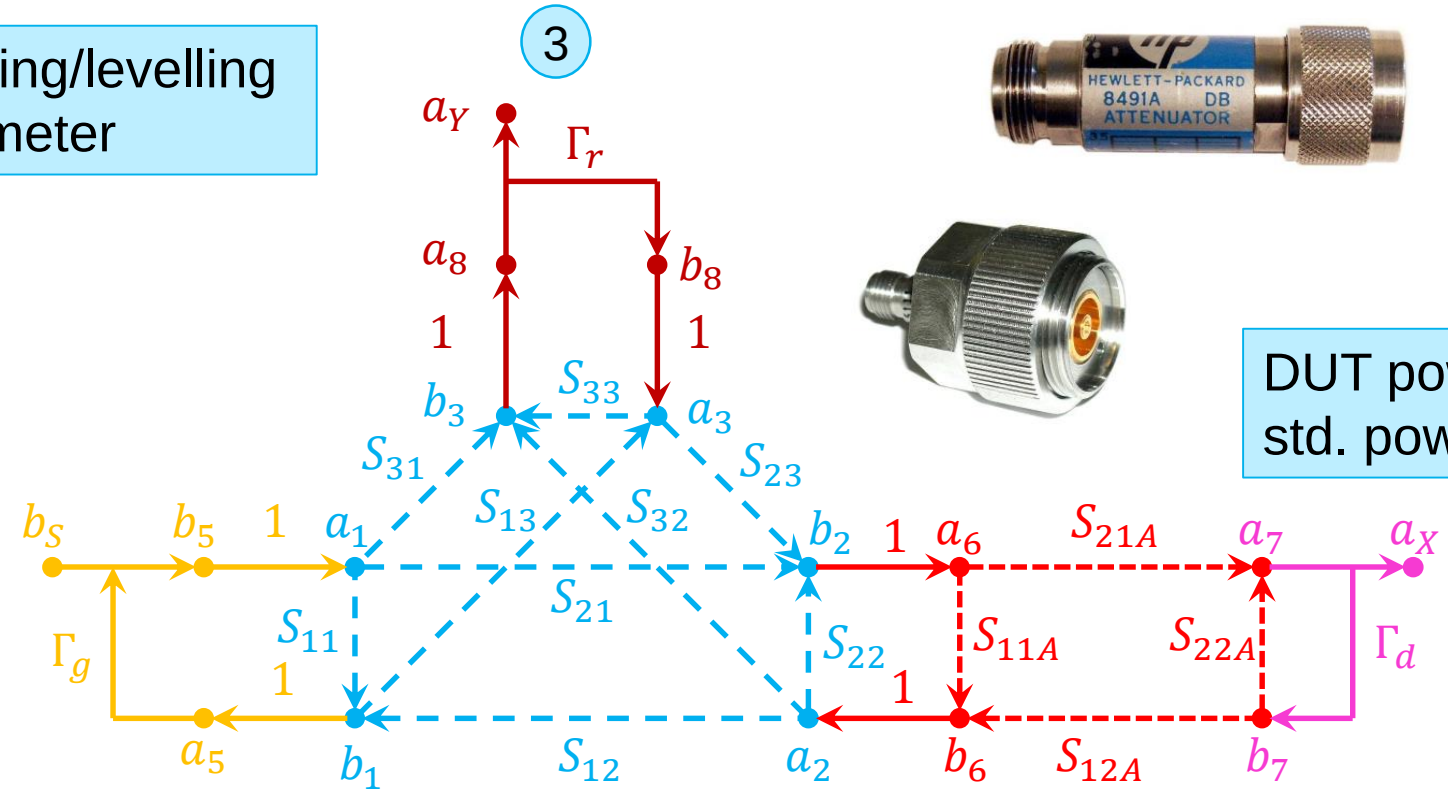

DUT power sensor
std. power sensor

generator

Q. Zhang *et al.*: Direct Comparison Transfer of Microwave Power Sensor Calibration with an Adaptor: Modelling and Evaluation, *Progress in Electromagnetics Research Letters,* Vol. 38, pp. 25-34, 2013

Levelled Source Method with Adpt / Att

standard directly connected to port 2

$$\frac{b_{2std}}{b_{3std}} = \left(\frac{S_{21}}{S_{31}}\right)\frac{1-\Gamma_r\Gamma_{e3}}{1-\Gamma_{std}\Gamma_{e2}}$$

Adaptor / att before the DUT

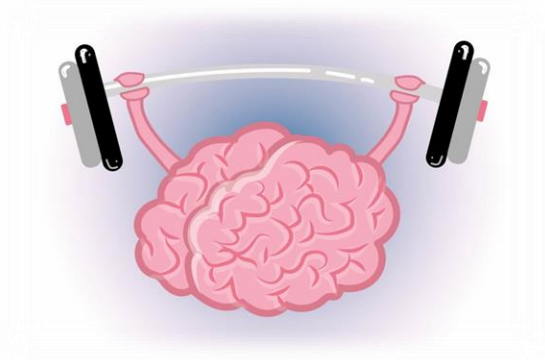

DUT connected to port 2 with an adaptor/attenuator

$$\frac{b_{2DUT}}{b_{3DUT}} = \left(\frac{S_{21}}{S_{31}}\right) \times \frac{S_{21A}(1-\Gamma_r\Gamma_{e3})}{1-S_{11A}\Gamma_{e2}-\Gamma_{DUT}(S_{22A}-S_{22A}S_{11A}\Gamma_{e2}+S_{21A}S_{12A}\Gamma_{e2})}$$

Q. Zhang et al.: Direct Comparison Transfer of Microwave Power Sensor Calibration with an Adaptor: Modelling and Evaluation, Progress in Electromagnetics Research Letters, Vol. 38, pp. 25-34, 2013

Levelled Source Method with Adpt / Att

Adaptor / att before the DUT

$$\frac{b_{2DUT}}{b_{3DUT}} = \left(\frac{S_{21}}{S_{31}}\right) \times \frac{S_{21A}(1-\Gamma_r\Gamma_{e3})}{1 - S_{11A}\Gamma_{e2} - \Gamma_{DUT}(S_{22A} - S_{22A}S_{11A}\Gamma_{e2} + S_{21A}S_{12A}\Gamma_{e2})}$$

$$CF_{DUT} = CF_{std}\frac{P_{DC,DUT}}{P_{DC,3DUT}}\frac{|b_{3DUT}|^2}{|b_{2DUT}|^2}\frac{P_{DC,3std}}{P_{DC,std}}\frac{|b_{2std}|^2}{|b_{3std}|^2}$$

after some manipulations

$$CF_{DUT} = CF_{std}\frac{P_{DC,DUT}}{P_{DC,3DUT}}\frac{P_{DC,3std}}{P_{DC,std}}\left|\frac{1-\Gamma_{DUT}S_{22A} - \Gamma_{e2}\Gamma_{A-DUT}}{S_{21A}(1-\Gamma_{std}\Gamma_{e2})}\right|^2$$

$$\Gamma_{A-DUT} = S_{11A} + \Gamma_{DUT}S_{21A}S_{12A} - \Gamma_{DUT}S_{22A}S_{11A}$$

Levelled Source Method with Adpt / Att

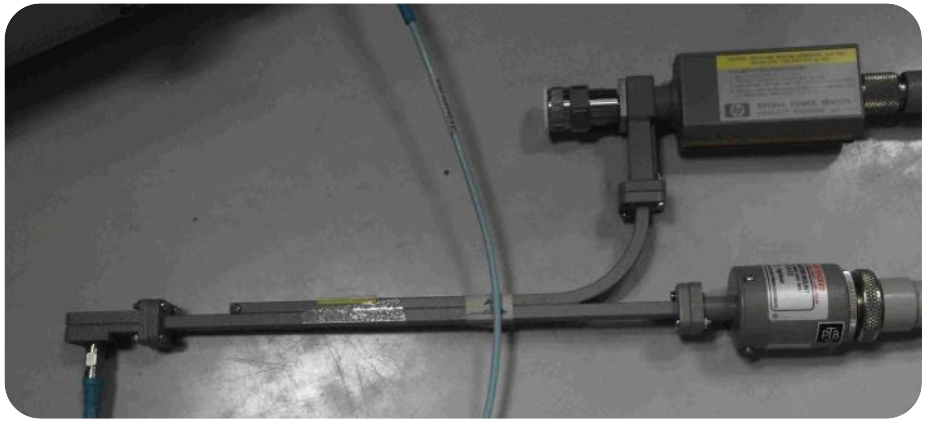

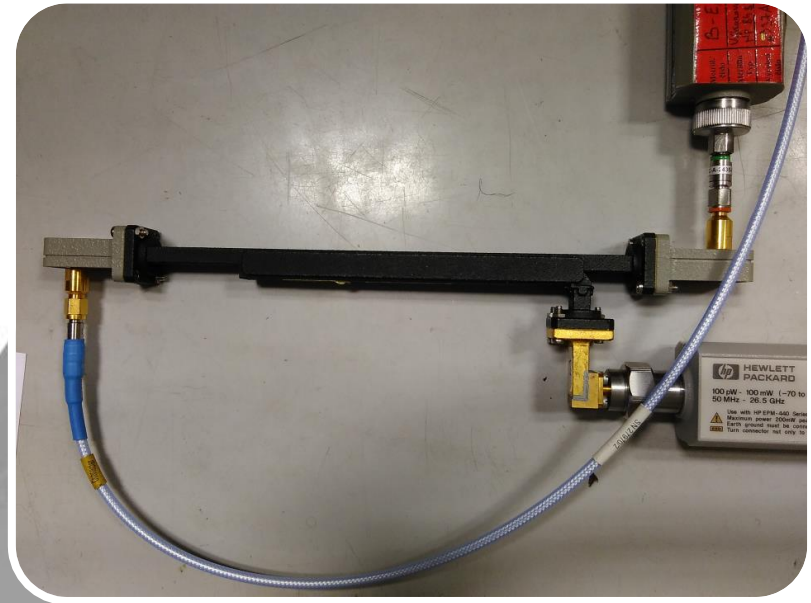

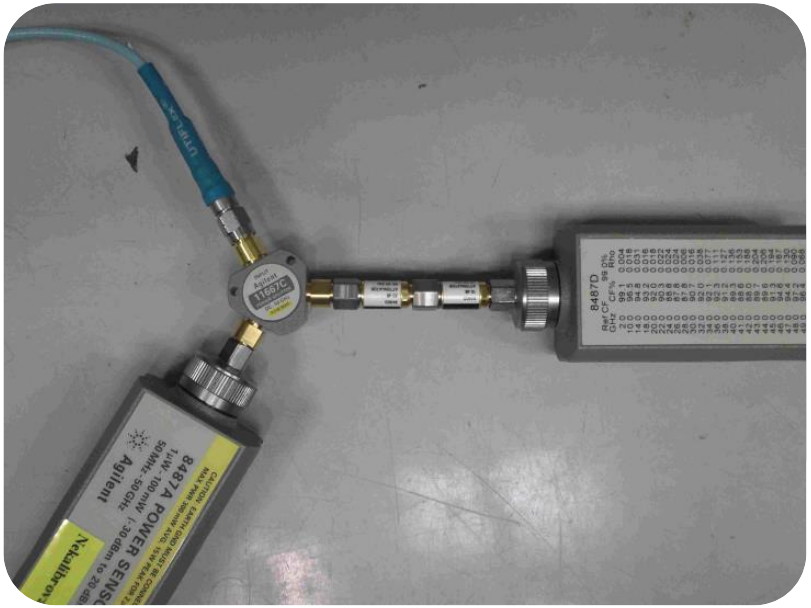

Levelled Source Method with Adpt / Att

Q. Zhang *et al.*: Direct Comparison Transfer of Microwave Power Sensor Calibration with an Adaptor: Modelling and Evaluation, *Progress in Electromagnetics Research Letters,* Vol. 38, pp. 25-34, 2013

Y. Shan *et al.*: , Generic Model and Case Studies of Microwave Power Sensor Calibration Using Direct Comparison Transfer, *IEEE Trans. Instrum. Meas.*, Vol. 62, No. 6, June 2013

T. Kang *et al.:* Direct comparison technique using a transfer power standard with an adapter and its uncertainty, in *Digest of the 2012 CPEM*, Washington DC (USA), 2012, pp. 728 - 729.

Y. Meng, Y. Shan: Measurement and Calibration of a High-Sensitivity Microwave Power Sensor with an Attenuator, *Radioengineering*, Vol. 23, No. 4, 2014, pp. 1055-1060

T. Qiu *et al.*, Microwave Power Sensor Calibration Using Direct Comparison Technique With Different Adaptors, in *Proc of the ISSNIP Conference*, Singapore, April 2014

Contents

- Introduction
- Methods
- Practical Hints
- Uncertainty Evaluation

Practical Hints

Reference Standard

- in theory may be of any type (bolometric, thermoelectric, diode)
- in practice, bolometric meters are the most suitable
  - mostly used is the thermistor principle
  - they are RF/DC substitution devices
  - relative stable characteristics

e.g., HP R486A (waveg.)

Practical Hints

Vector Corrections

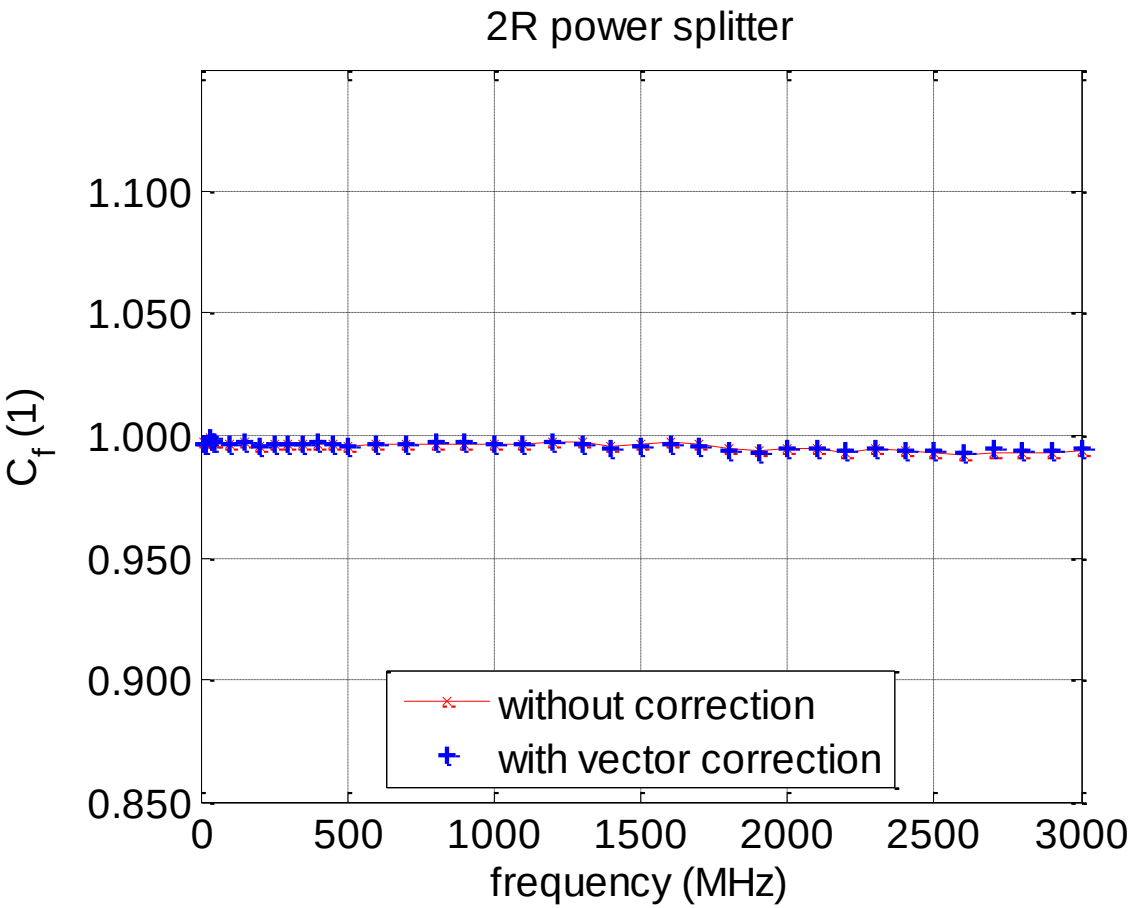

- both monitoring and std. (DUT) sensor directly at the splitter arms, vector correction has only small influence

Practical Hints

Vector Corrections

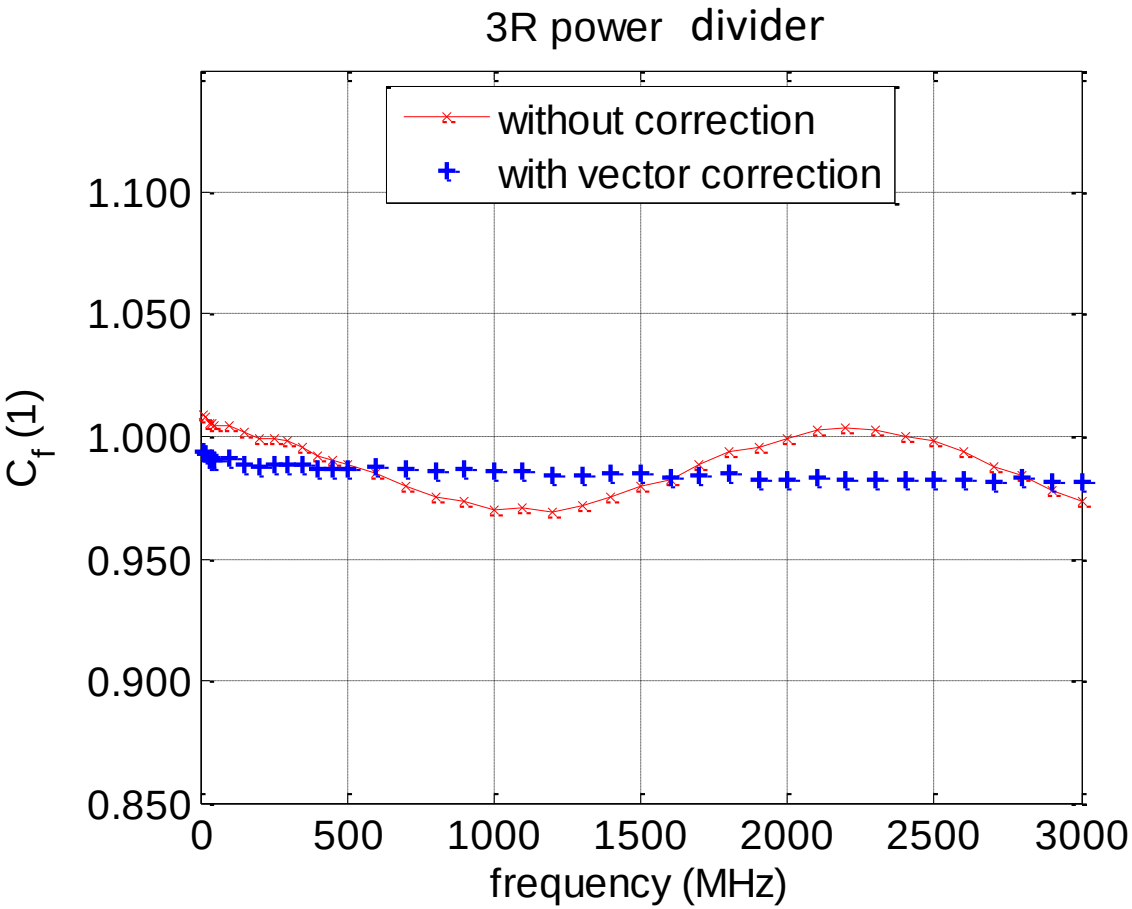

- both monitoring and std. (DUT) sensor directly at the splitter arms, vector correction has visible effect

Practical Hints

Vector Corrections

- vector corrections etc. are fine, but bad connector repeatability can spoil all the effort research conducted by NPL & Agilent in 2001, power sensors and power splitters with different connectors evaluated
  - a) old precision connector
  - b) new precision connector (hex nut)
  - c) metrology grade connector

Conclusion

- calibration factor may change significantly with bad connectors
- need to measure connector repeatability for every connector pair forming part of a measurement system

Practical Hints

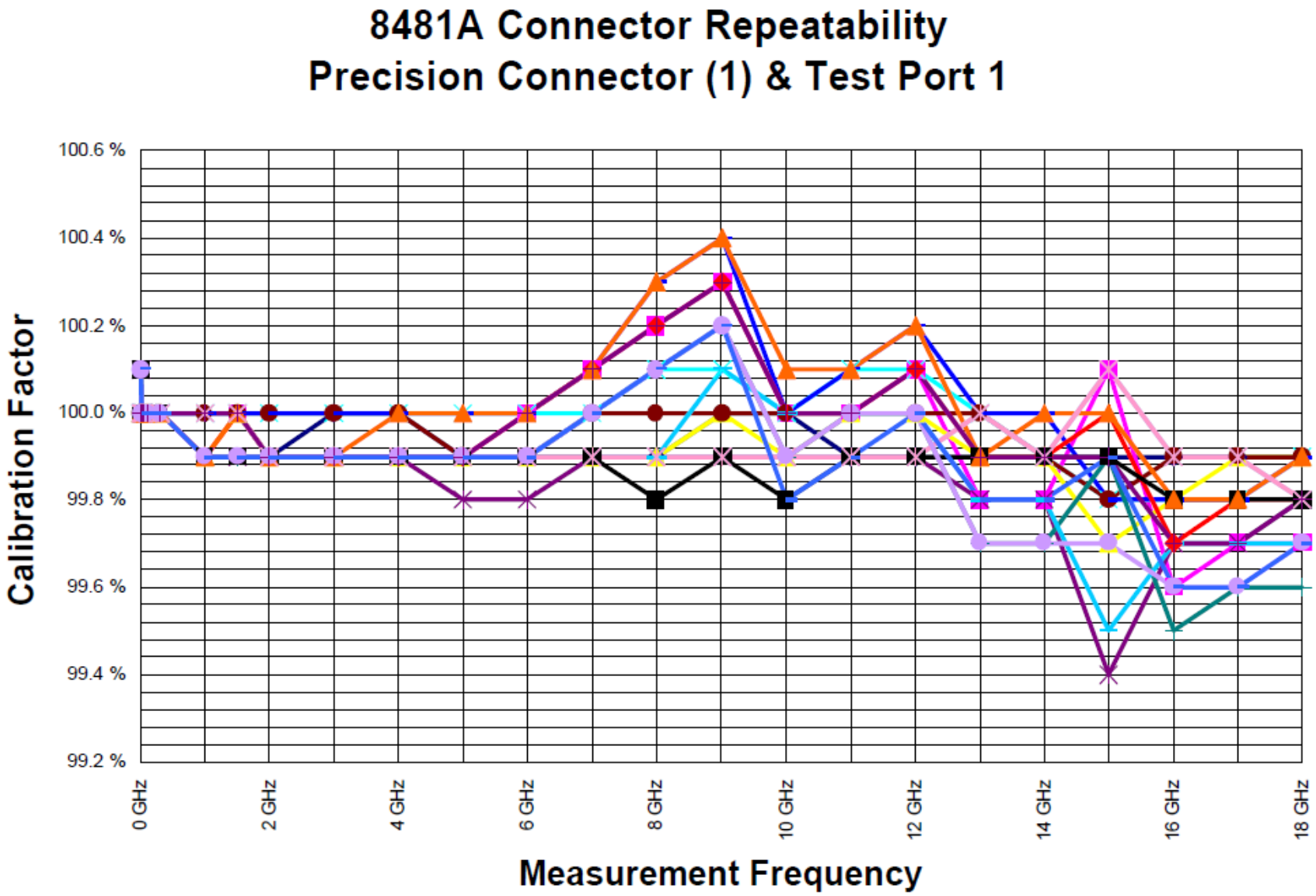

Practical Hints

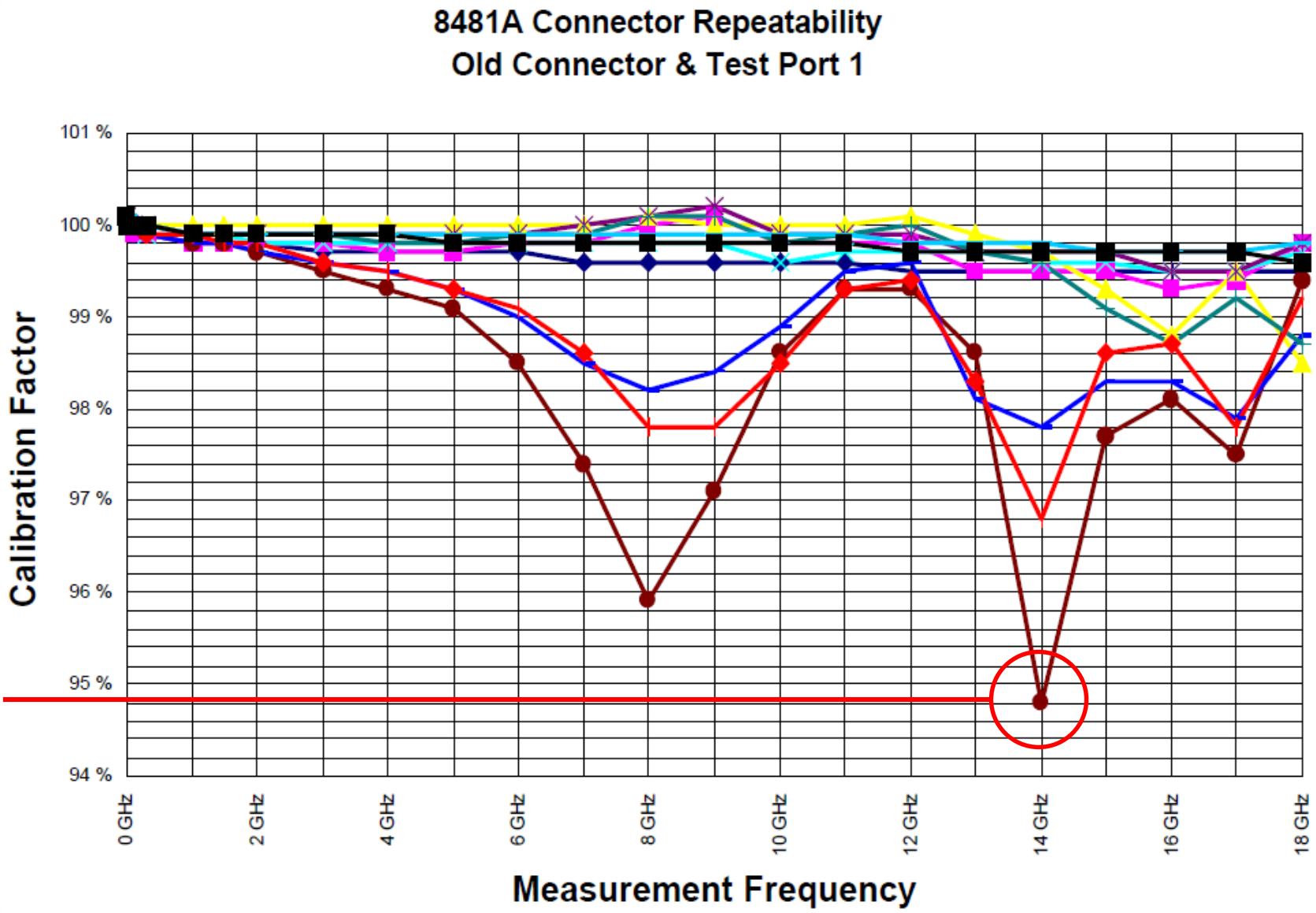

Practical Hints

Commercial Solutions

- highly linear thermistor power sensor + 2R power splitter in one block, calibration of customer's power sensors + update of the data in EEPROM memory, traceable to PTB

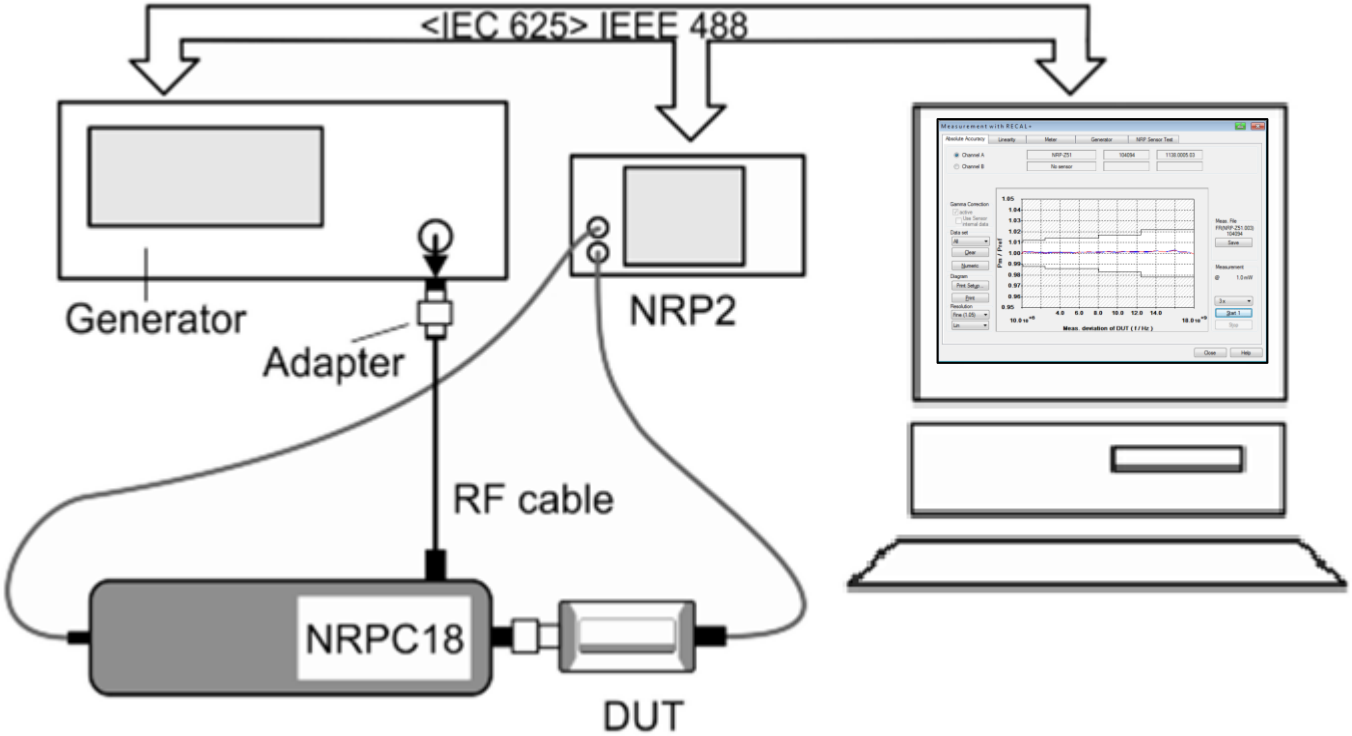

e.g., R&S NRPCxx

- other vendors have similar solutions (similarly expensive)

Practical Hints

Do It Yourself

- power measurement setup (pimp your PMS)

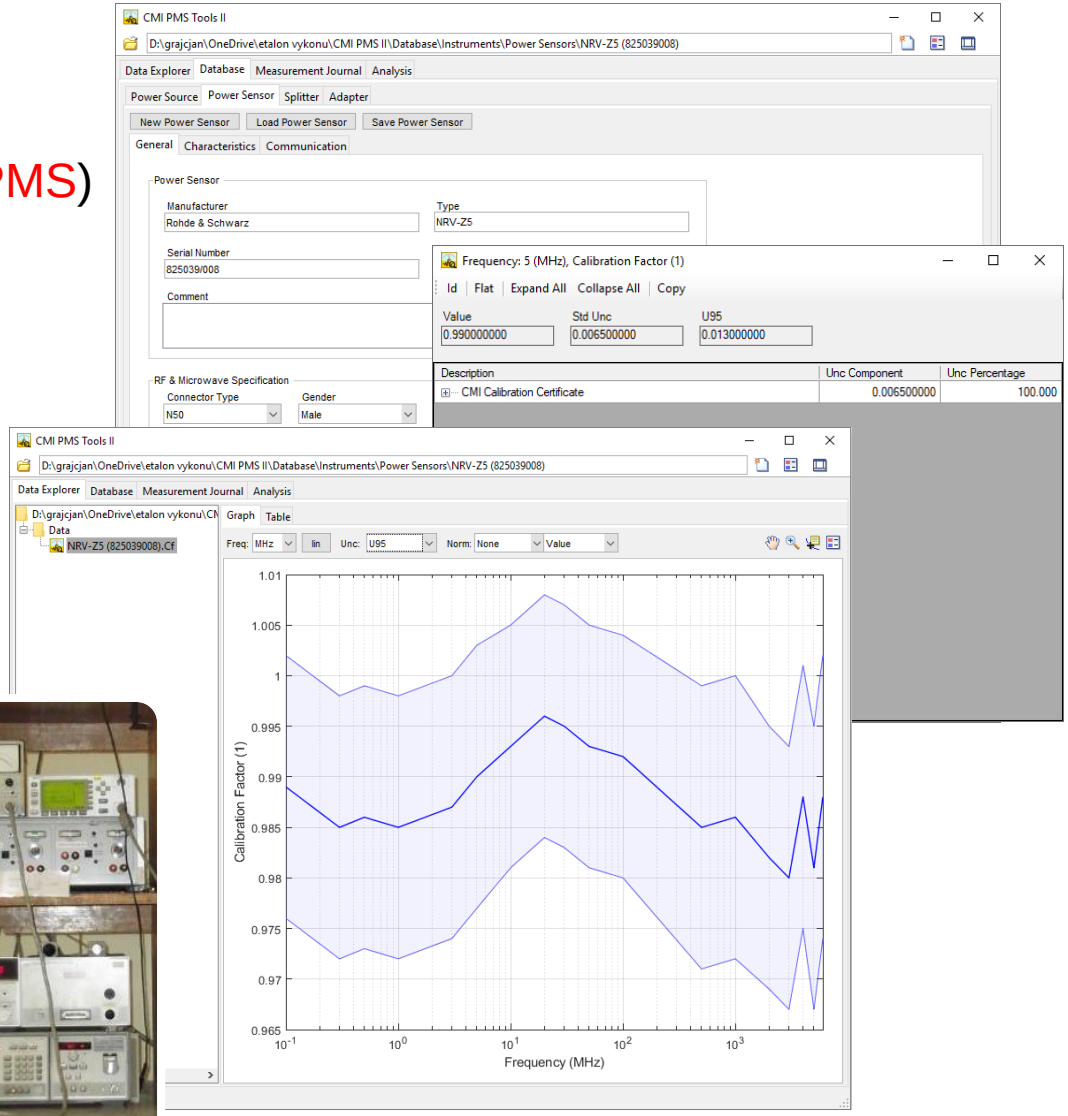

Contents

- Introduction
- Methods
- Practical Hints
- Uncertainty Evaluation

Direct Comparison Method

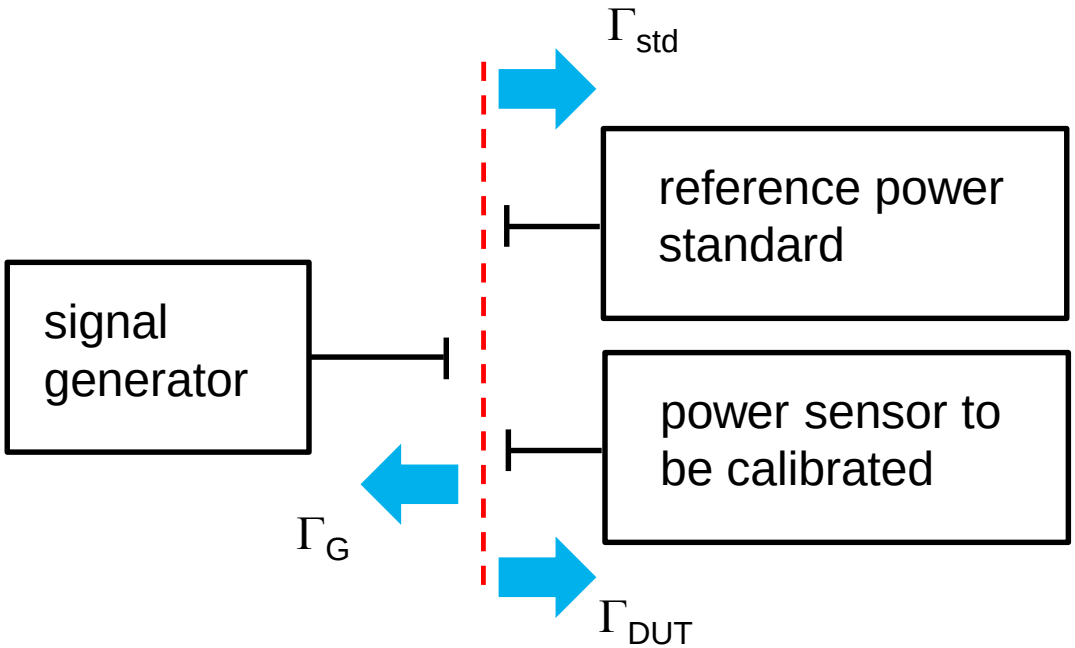

$$CF_{DUT} = CF_{std}\frac{P_{DC,DUT}}{P_{DC,std}}M \qquad M = \frac{|1-\Gamma_G\Gamma_{DUT}|^2}{|1-\Gamma_G\Gamma_{std}|^2}$$

Direct Comparison Method

Without Vector Correction

$$CF_{DUT} = CF_{std}\frac{P_{DC,DUT}}{P_{DC,std}}\cancel{M} \qquad M = \frac{|1-\Gamma_G\Gamma_{DUT}|^2}{|1-\Gamma_G\Gamma_{std}|^2}$$

- Mismatch uncertainty (U-distribution)

$$u^2(M) = 2|\Gamma_G||\Gamma_{std}| + 2|\Gamma_G||\Gamma_{DUT}|$$

Direct Comparison Method

With Vector Correction

$$CF_{DUT} = CF_{std}\frac{P_{DC,DUT}}{P_{DC,std}}M \qquad M = \frac{|1-\Gamma_G\Gamma_{DUT}|^2}{|1-\Gamma_G\Gamma_{std}|^2}$$

complex reflection coefficients considered

$$a = \mathrm{Re}\{\Gamma_{std}\} \qquad d = \mathrm{Im}\{\Gamma_{DUT}\}$$
$$b = \mathrm{Im}\{\Gamma_{std}\} \qquad e = \mathrm{Re}\{\Gamma_G\}$$
$$c = \mathrm{Re}\{\Gamma_{DUT}\} \qquad f = \mathrm{Im}\{\Gamma_G\}$$

real + imaginary is better for numerical calculations compared to the magnitude + phase

$$CF_{DUT} = CF_{std}\frac{P_{DC,DUT}}{P_{DC,std}}\frac{1+2df-2ce+c^2e^2+d^2e^2+c^2f^2+d^2f}{1+2bf-2ae+a^2e^2+b^2e^2+a^2f^2+b^2f^2}$$

Direct Comparison Method

With Vector Correction

$$CF_{DUT} = CF_{std}\frac{P_{DC,DUT}}{P_{DC,std}}\frac{1+2df-2ce+c^2e^2+d^2e^2+c^2f^2+d^2f}{1+2bf-2ae+a^2e^2+b^2e^2+a^2f^2+b^2f^2}$$

- **sensitivity coefficients:**

$$\frac{\delta CF_{DUT}}{\delta CF_{std}},\frac{\delta CF_{DUT}}{\delta P_{DC,std}},\frac{\delta CF_{DUT}}{\delta P_{DC,DUT}}$$

$$\frac{\delta CF_{DUT}}{\delta a},\frac{\delta CF_{DUT}}{\delta Pb},\ldots,\frac{\delta CF_{DUT}}{\delta f}$$

$$u_c^2(y)=\sum_{i=1}^{N}\left[c_i u(x_i)\right]^2 \equiv \sum_{i=1}^{N} u_i^2(y)$$

where

$$c_i \equiv \partial f/\partial x_i, \quad u_i(y) \equiv |c_i| u(x_i)$$

- **normal probability distribution is assumed for real and imaginary parts of the reflection coefficients**

Levelled Source Method

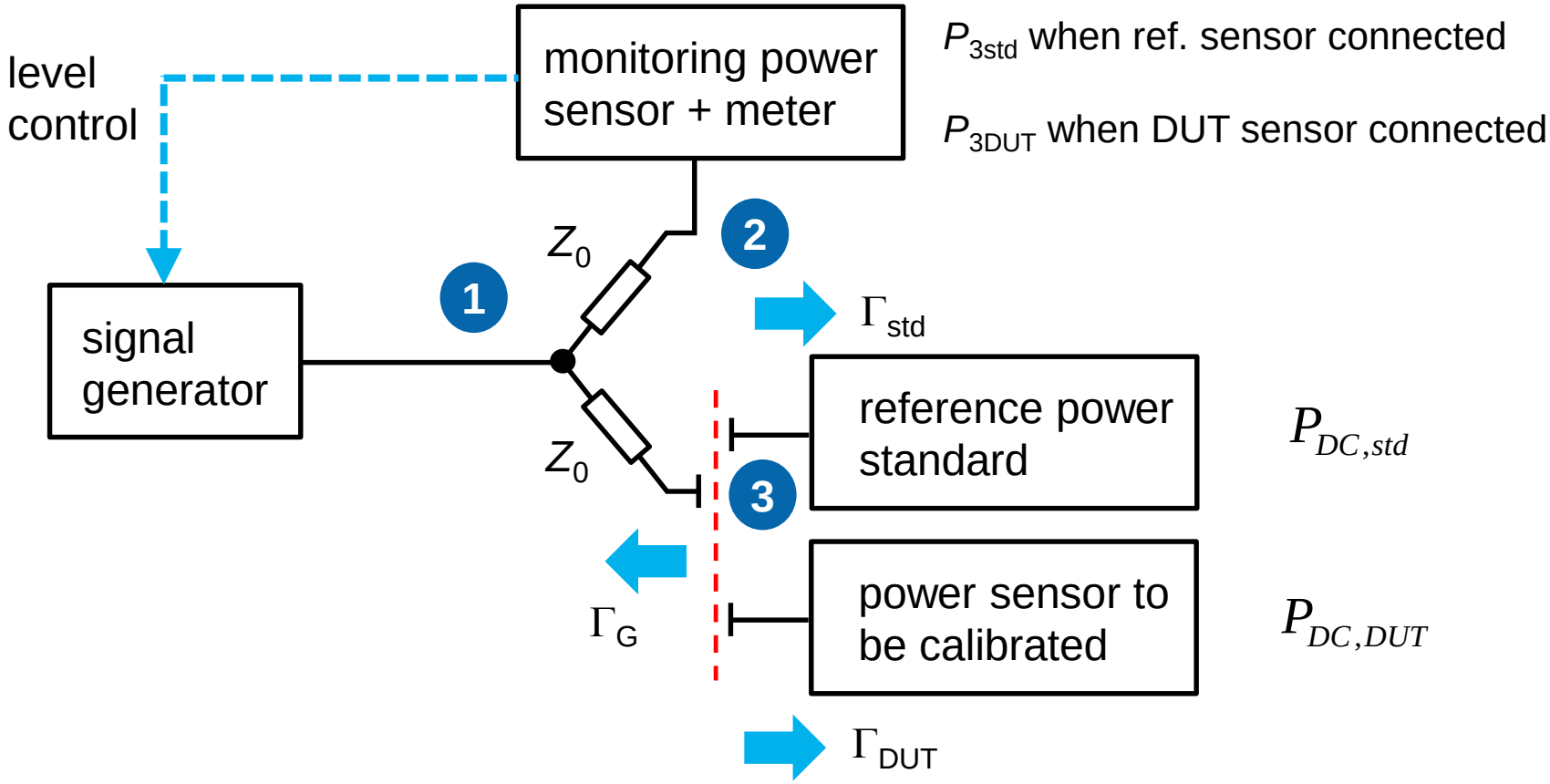

$$CF_{DUT} = CF_{std} \frac{P_{DC,DUT}}{P_{DC,std}} \frac{P_{3std}}{P_{3DUT}} \frac{M_D}{M_s}$$

$$MM = \frac{M_D}{M_s} = \frac{\left|1-\Gamma_{DUT}\Gamma_G\right|^2}{\left|1-\Gamma_{std}\Gamma_G\right|^2}$$

Levelled Source Method

- **sensitivity coefficients :**

$$c_{CFSTD} = \frac{\partial CF_{DUT}}{\partial CF_{STD}} = \frac{CF_{DUT}}{CF_{STD}}$$

$$c_{P3DUT} = \frac{\partial CF_{DUT}}{\partial P_{3DUT}} = -\frac{CF_{DUT}}{P_{3DUT}}$$

$$c_{PDC,DUT} = \frac{\partial CF_{DUT}}{\partial P_{DC,DUT}} = \frac{CF_{DUT}}{P_{DC,DUT}}$$

$$c_{P3std} = \frac{\partial CF_{DUT}}{\partial P_{3std}} = \frac{CF_{DUT}}{P_{3std}}$$

$$c_{PDC,std} = \frac{\partial CF_{DUT}}{\partial P_{DC,std}} = -\frac{CF_{DUT}}{P_{DC,std}}$$

$$c_{MM} = \frac{\partial CF_{DUT}}{\partial MM} = \frac{CF_{DUT}}{MM}$$

Levelled Source Method

- **standard uncertainty :**

$$u^2(CF_{DUT}) = c_{CFSTD}{}^2 u^2(CF_{std}) + c_{PDC,DUT}{}^2 u^2(P_{DC,DUT})$$

$$+ c_{PDC,std}{}^2 u^2(P_{DC,std}) + c_{P3std}{}^2 u^2(P_{3std})$$

$$+ c_{P3DUT}{}^2 u^2(P_{3DUT}) + c_{MM}{}^2 u^2(MM)$$

- **expanded uncertainty :**

$$U(CF_{DUT}) = k\,u(CF_{DUT})$$

Levelled Source Method with Adpt / Att

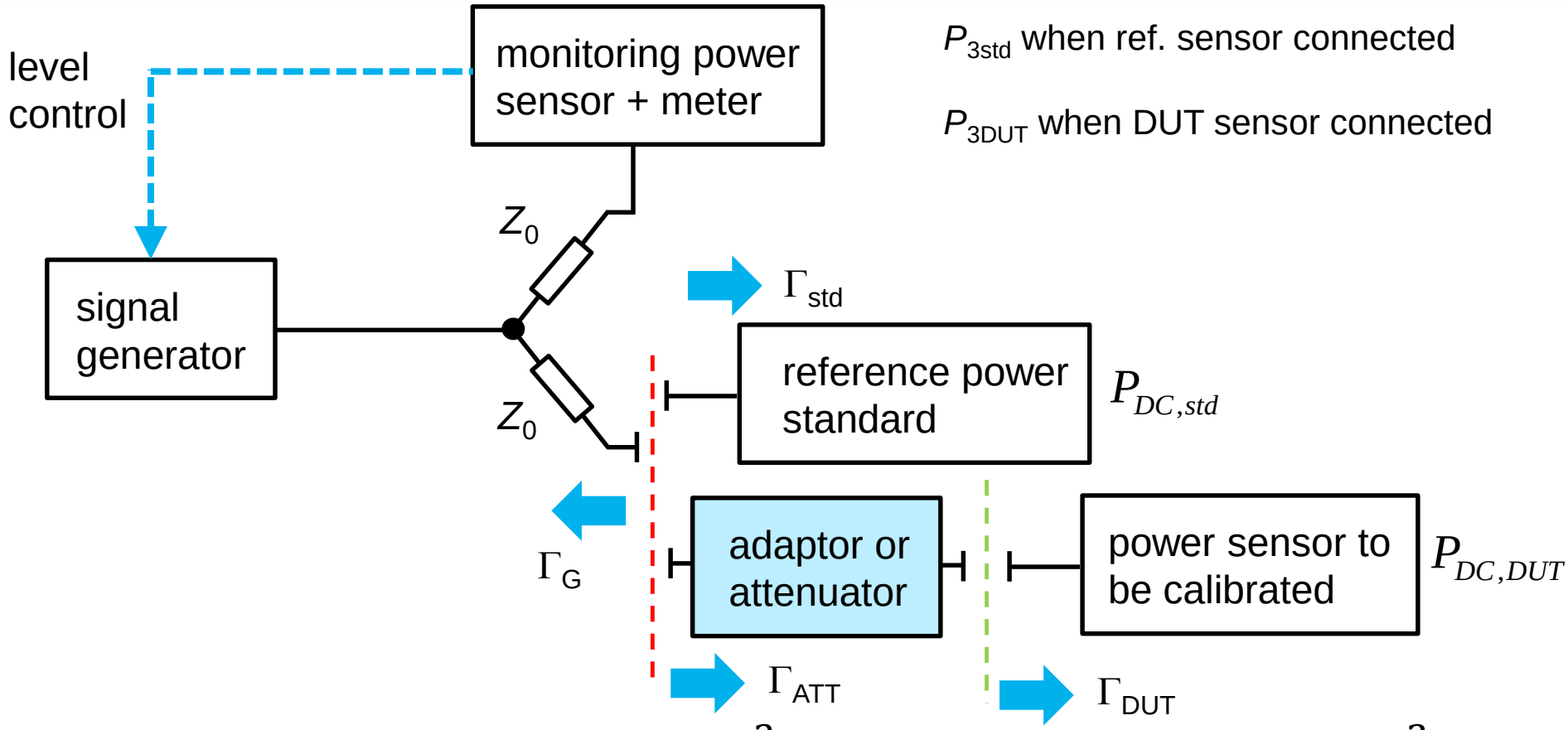

$$CF_{DUT} = CF_{std}\frac{P_{DC,DUT}}{P_{DC,3DUT}}\frac{P_{3std}}{P_{std}}\left|\frac{1}{S_{21A}}\right|^2\left|\frac{1-\Gamma_{DUT}S_{22A}-\Gamma_{e2}\Gamma_{A-DUT}}{(1-\Gamma_{std}\Gamma_{e2})}\right|^2$$

$$\Gamma_{A-DUT} = S_{11A} + \Gamma_{DUT}S_{21A}S_{12A} - \Gamma_{DUT}S_{22A}S_{11A}$$

Levelled Source Method with Adpt / Att

$$CF_{DUT} = \boxed{CF_{std}\frac{P_{DUT}}{P_{3DUT}}\frac{P_{3std}}{P_{std}}}\boxed{\left|\frac{1}{S_{21A}}\right|^2}\boxed{\left|\frac{1-\Gamma_{DUT}S_{22A}-\Gamma_{e2}\Gamma_{A-DUT}}{(1-\Gamma_{std}\Gamma_{e2})}\right|^2}$$

it has already been discussed

Effect of transmission coefficient of the attenuator

$$c_{S21A} = \frac{\partial CF_{DUT}}{\partial S_{21A}}$$

= MM, other parameters

$$c_{MM} = \frac{\partial CF_{DUT}}{\partial MM}$$

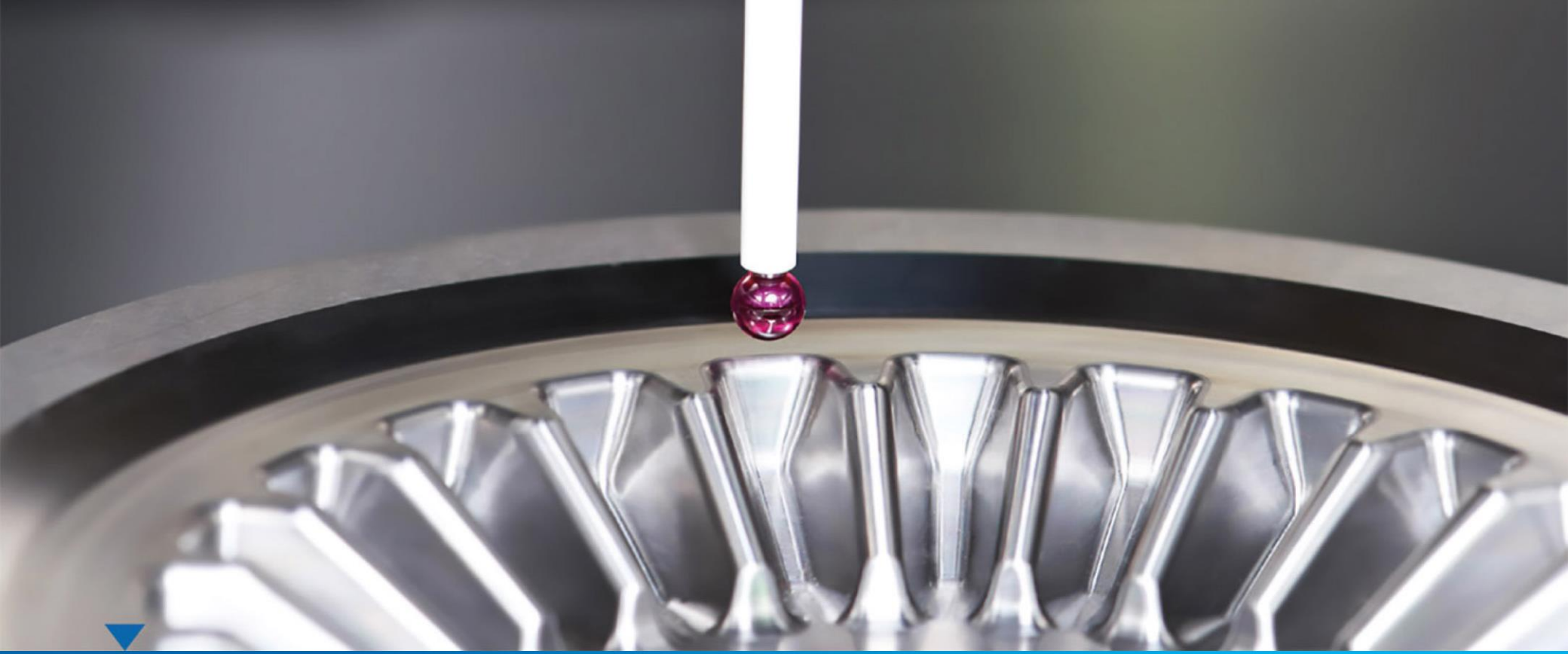

THANKS FOR YOUR ATTENTION

CZECH METROLOGY INSTITUTE

EMPIR

EURAMET

The EMPIR initiative is co-funded by the European Union's Horizon 2020 research and innovation programme and the EMPIR Participating States

EMPIR project “15RPT01 Development of RF and microwave metrology capability” http://rfmw.cmi.cz/

Okružní 31, 638 00 Brno, Czech Republic, + 420 545 555 337, www.cmi.cz