Calibration of measurement receivers with quasi-peak detector

Martin Hudlička
Czech metrology institute
mhudlicka@cmi.cz

Contents

Introduction

- calibration methods generally given in standards (CISPR 16-1-1, EN 55016-1-1), some manufacturers use modified methods

- absolute calibration of amplitude response - generally a signal with known spectral properties at the receiver input
- uniform spectrum of the pulse generator needed (at least in the bandwidth of the receiver)

- relative calibration of amplitude response – exact value of the spectrum amplitude not needed
- the shape of the pulse must not change
- the pulse repetition rate must be stable

- two basic types of signals in the time-domain resulting in the same signal in the frequency domain
  - pulse in the base band

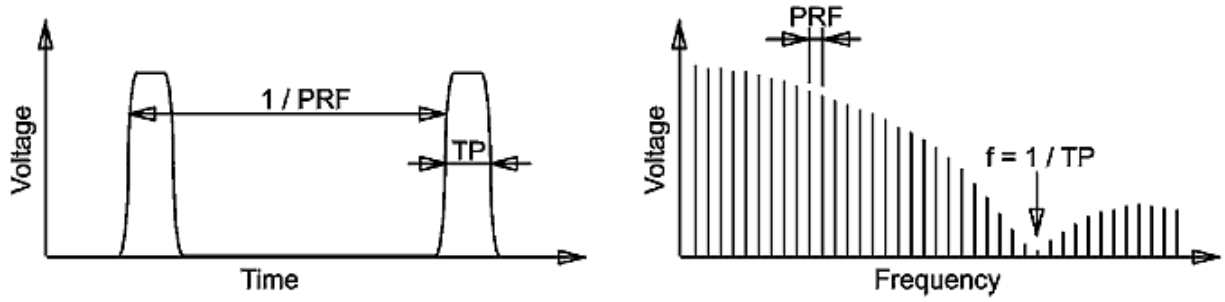

  - radiofrequency pulse

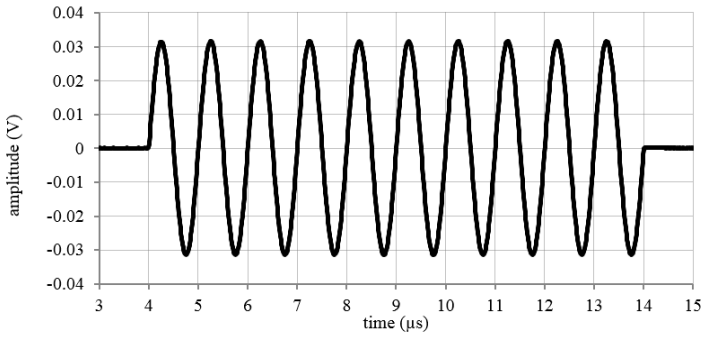

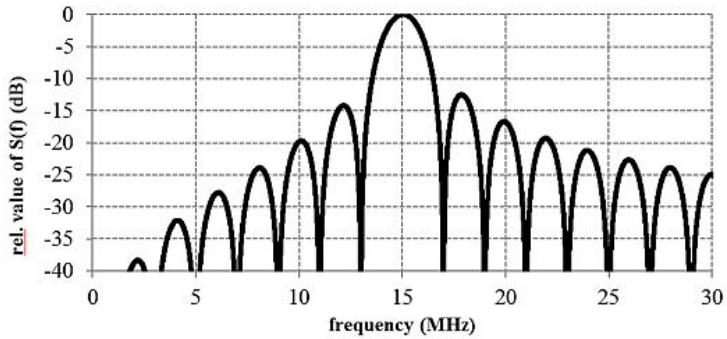

(see the presentation **Pulse generators – overview**)

Contents

- **EN 55016-1-1 ed. 3, Annex A**: Determination of response to repeated pulses of quasi-peak and rms-average measuring receivers
  - response of the pre-detector stages
  - response of the QP voltmeter detector to output of preceding stages
- gives an overview of calculation of the time constants, selectivity curves, bandwidths etc.
- assumes calibrated pulse generator with known properties

response of the pre-detector stages

- determined solely by the IF stages
- selectivity can be obtained by an assembly of 2 critically-coupled tuned transformers (desired B_{-6dB})
- equivalent low-pass filter used to calculate the envelope of this pulse

envelope of the pulse

$$A(t) = 4\omega_0 G e^{-\omega_0 t}(\sin \omega_0 t - \omega_0 t \cos \omega_0 t)$$

G = overall gain at tuned frequency

ω_0 = angular frequency of value $(\pi/\sqrt{2})B_{-6dB}$

response of the pre-detector stages

- envelope of the response of two transformers to an impulse area $\nu\tau$

$$A(t) = (\nu\tau)4\omega_0 G e^{-\omega_0 t}(\sin\omega_0 t - \omega_0 t\cos\omega_0 t)$$

- corresponding selectivity curve of equivalent LP filter ($\tau << 1/\omega_0$)

$$F(f) = G\frac{2\omega_0^2}{[(\omega_0 + j\omega)^2 + \omega_0^2]^2}$$

response of the pre-detector stages

- bandwidths for 3 dB and 6 dB drop

$$B_{-3dB} = \frac{\left[\sqrt{2}\sqrt[4]{\sqrt{2}-1}\right]\omega_0}{\pi} = 0.361\omega_0$$

$$B_{-6dB} = \frac{\sqrt{2}\omega_0}{\pi} = 0.450\omega_0$$

response of the pre-detector stages

- effective bandwidth of a receiver comprised of an ideal rect. filter giving the same response as the receiver

$$\Delta f = \int_{-\infty}^{\infty} F^2(f)df = \int_{0}^{\infty} 2\left\{\frac{2\omega_0^4}{[(\omega_0 + j\omega)^2 + \omega_0^2]^4}\right\} df = 0.375\omega_0$$

$$B_{-3dB} = 0.963\Delta f$$

response of the QP detector to output of preceding stages

- connection of the detector to the IF stage must not change the amplitude or shape of the signal
- any detector reduced to
  - nonlinear element
  - series resistance
  - capacitance + discharge resistance

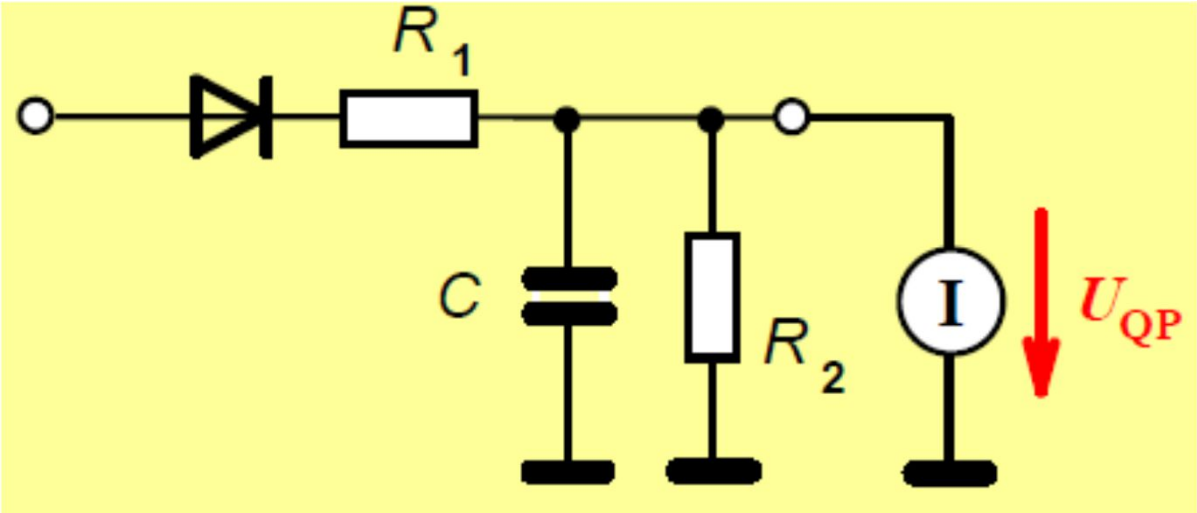

response of the QP detector to output of preceding stages

- electrical charge constant $T_C \propto R_1 C$
- electrical discharge constant $T_D = R_2 C$
- relationship between T_C and $R_1 C$: indicated voltage 0.63x the final value in $t = T_C$
- voltage across capacitor related to the amplitude A of the RF signal applied to the detector

$$\frac{dU}{dt} + UI(RC) = \frac{A(\sin\theta - \theta\cos\theta)}{\pi R_1 C}$$

$$U = A\cos\theta$$

response of the QP detector to output of preceding stages

- value for product R_1C found by approximation

band	T_C	T_D	R_1C
A	45 ms	500 ms	1 / 2.81 ms
B	1 ms	160 ms	1 / 3.95 ms
C+D	1 ms	550 ms	1 / 4.07 ms

$\Rightarrow$ solution for $$\frac{dU}{dt} + UI(RC) = \frac{A(\sin\theta - \theta\cos\theta)}{\pi R_1 C}$$

response of the indicating instrument to the signal from QP det.

- solution of a differential equation of a critically damped mechanical oscillator
- dependent on the discharge time T_D and mechanical constant of the mechanical instrument (scale)

relation between indications of different detectors

Band A

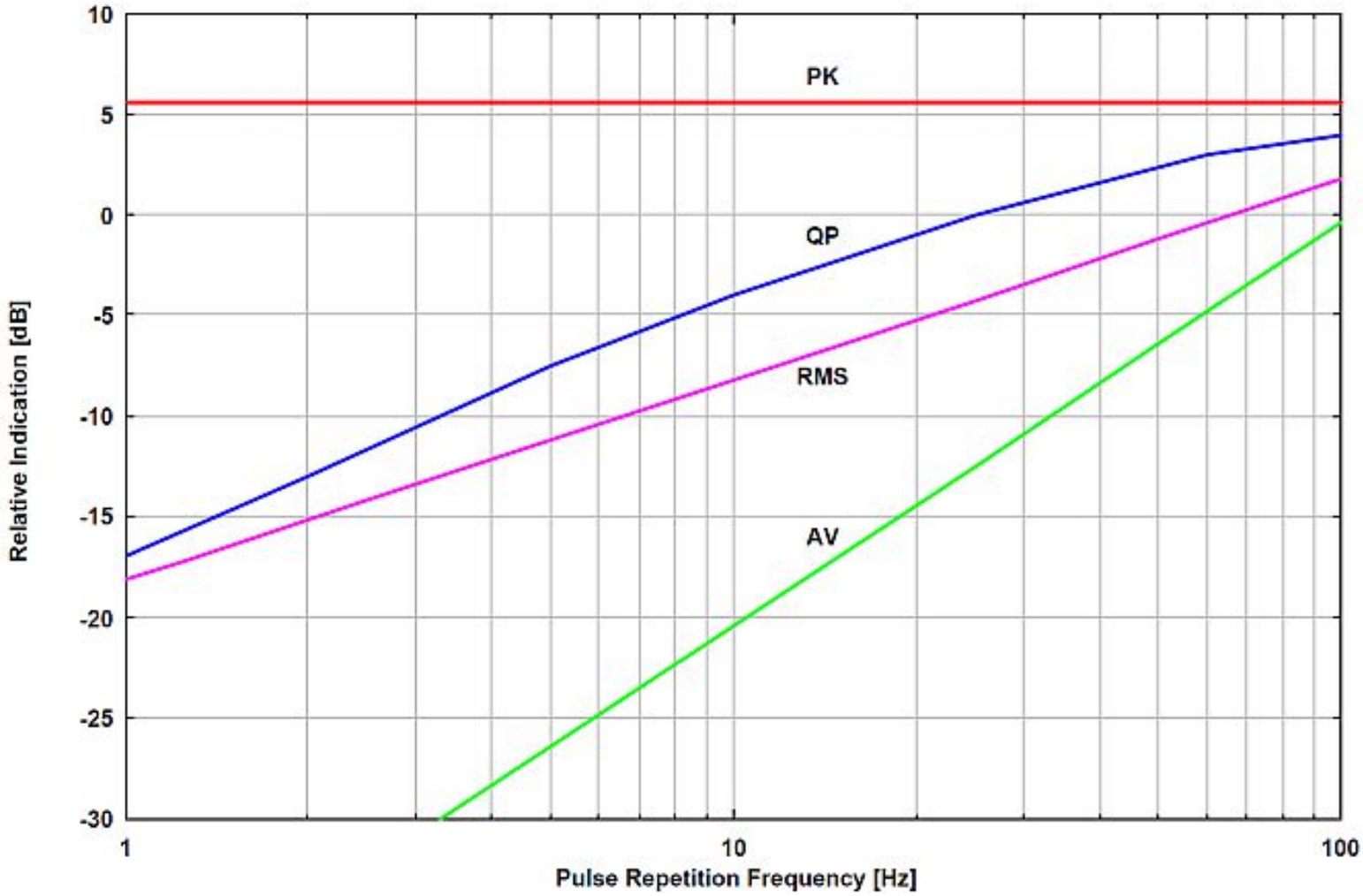

relation between indications of different detectors

Band B

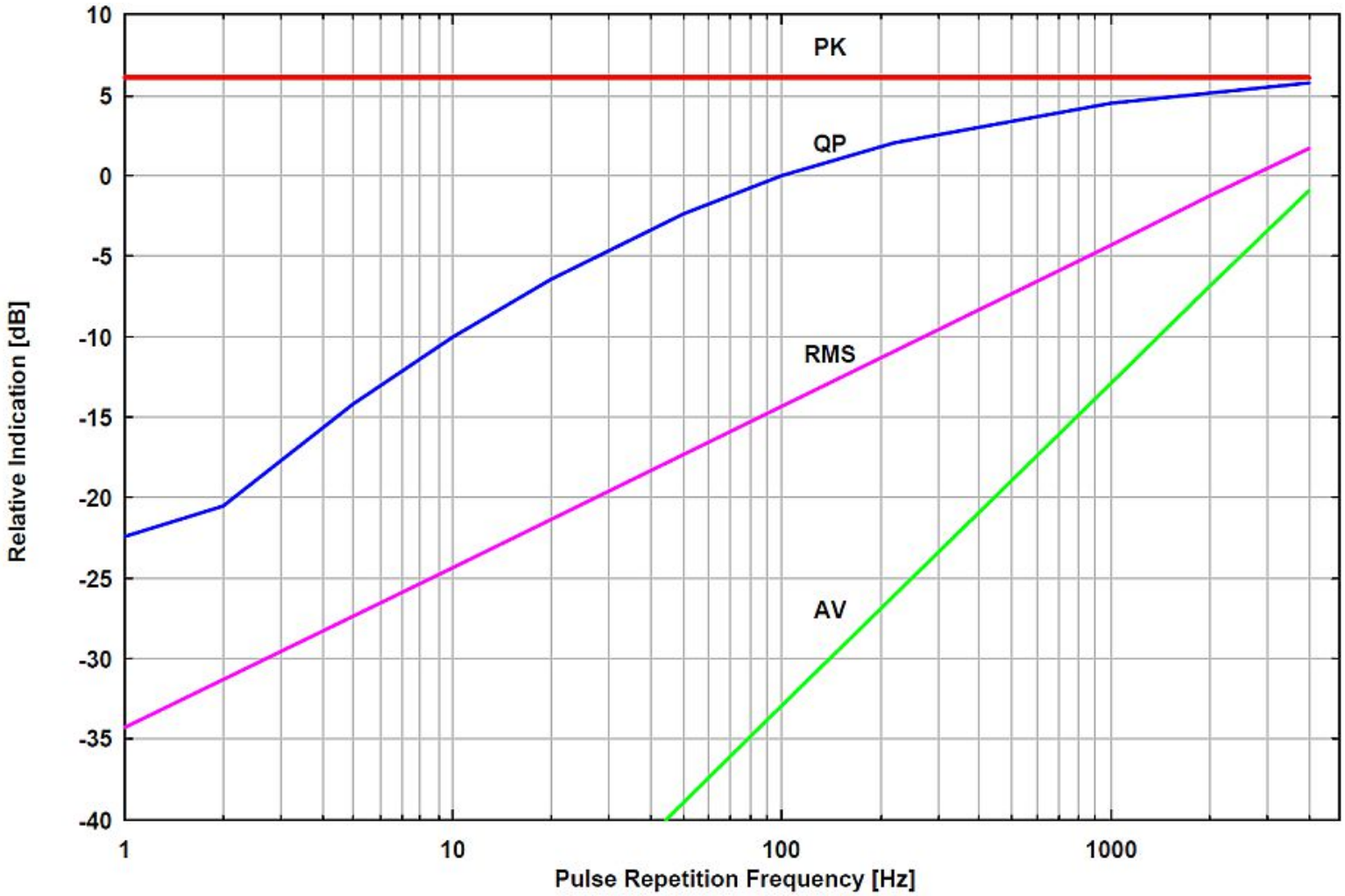

relation between indications of different detectors

Band

C/D

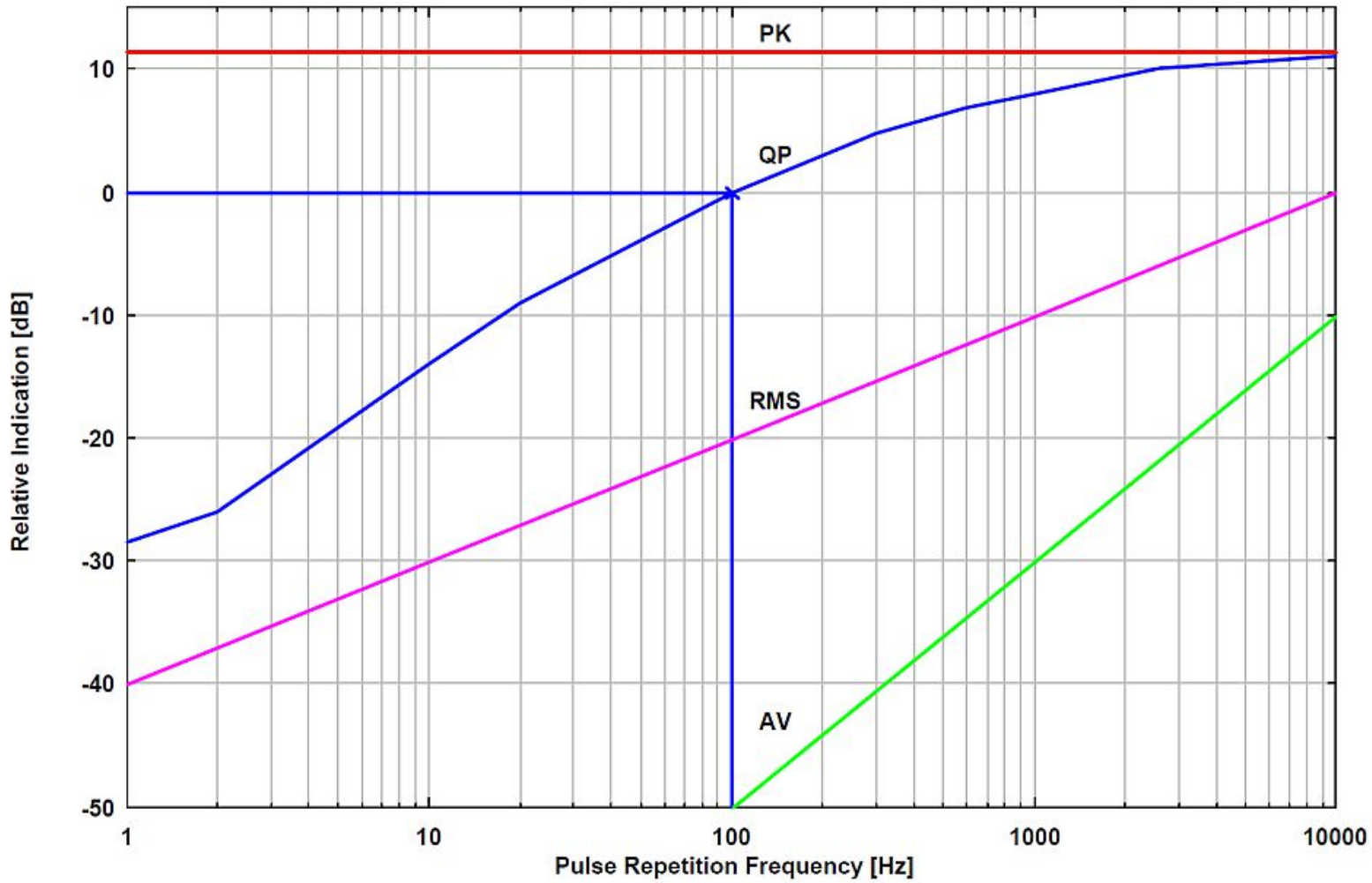

measurement of the impulse bandwidth

- ratio of the peak value U_p measured by the receiver and the spectral density D

$$B_{imp} = \frac{U_p}{D} \qquad [\text{MHz; µV; µV/MHz}]$$

- both U_p and D assumed to be RMS quantities (CW signal)
- spectral density usually not available $\Rightarrow$ 2 measurement methods recommended in CISPR 16-1-1

measurement of the impulse bandwidth

- method 1: comparison of responses of B_{imp} to two pulses with different pulse repetition frequencies (prf)

- pulse-modulated RF signal, two different prfs

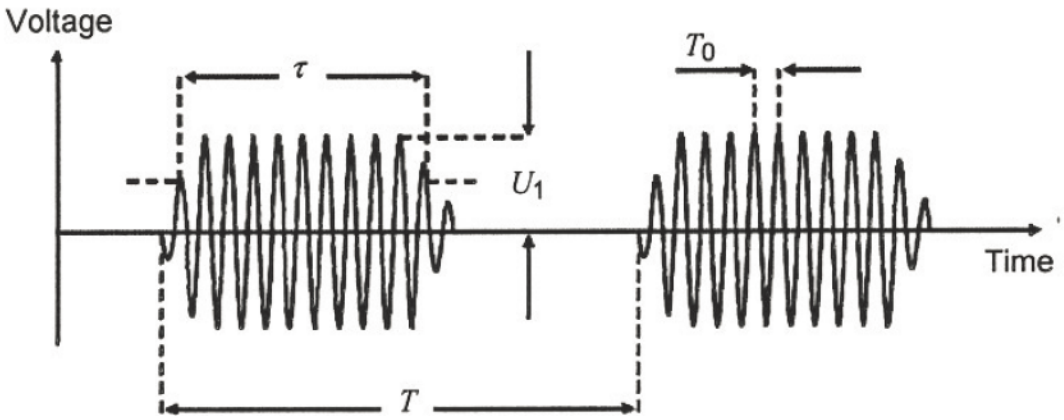

τ Pulse width (at 50 % points)

$f_p = \frac{1}{T}$ Pulse repetition frequency (PRF)

$f_0 = \frac{1}{T_0}$ Carrier signal frequency

measurement of the impulse bandwidth

- method 1: comparison of responses of B_{imp} to two pulses with different pulse repetition frequencies (prf)

- high prf ($f_p >> B_{imp}$): receiver can be tuned to the carrier frequency

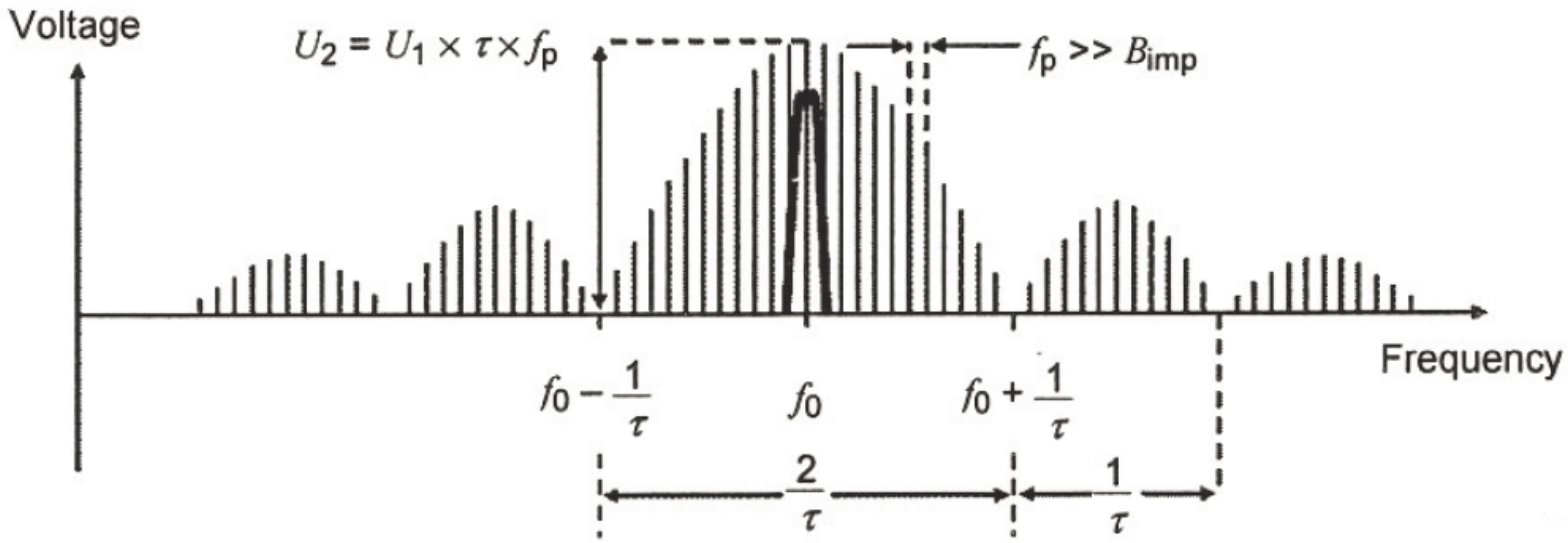

measurement of the impulse bandwidth

- method 1: comparison of responses of B_{imp} to two pulses with different pulse repetition frequencies (prf)

- low prf ($f_p << B_{imp}$): spectrum will appear as a broadband signal with $D = U_1 \tau$

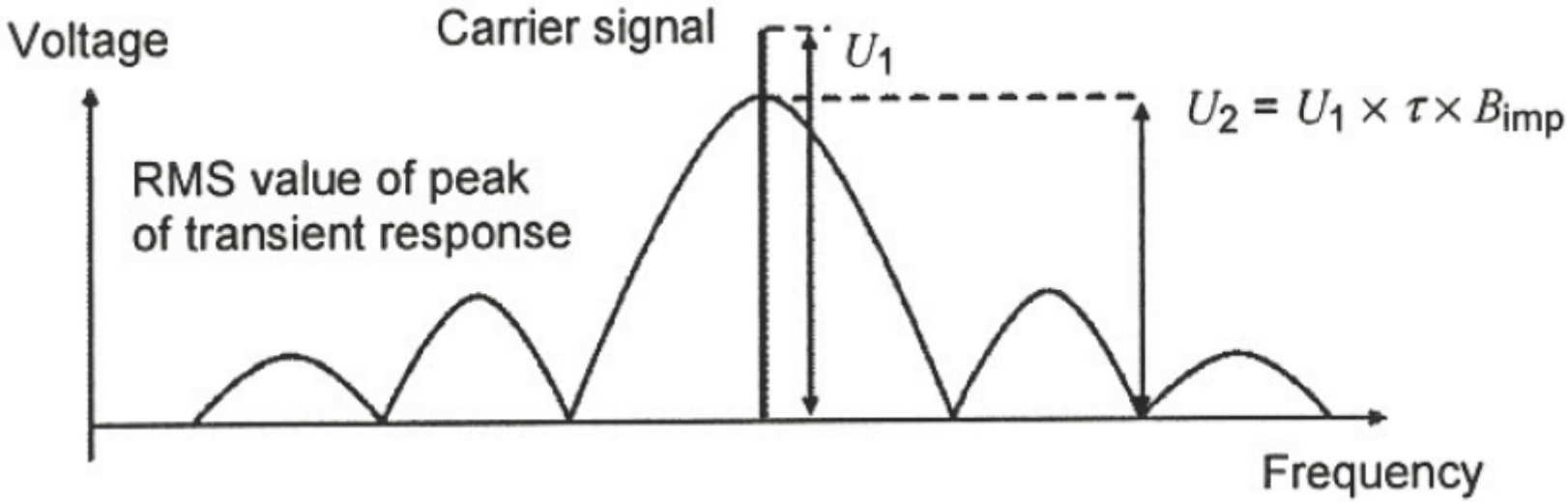

measurement of the impulse bandwidth

- method 1: comparison of responses of B_{imp} to two pulses with different pulse repetition frequencies (prf)

- example: for B_{imp} = 1 MHz, f_{p1} = 30 MHz and f_{p2} = 30 kHz

$$U_2 = U_1 \tau f_{p1}$$
$$U_p = U_1 \tau B_{imp}$$

$$B_{imp} = f_{p1} \frac{U_p}{U_2}$$

(product $U_1 \tau$ must be equal in both measurements)

measurement of the impulse bandwidth

- method 1: comparison of responses of B_{imp} to two pulses with different pulse repetition frequencies (prf)

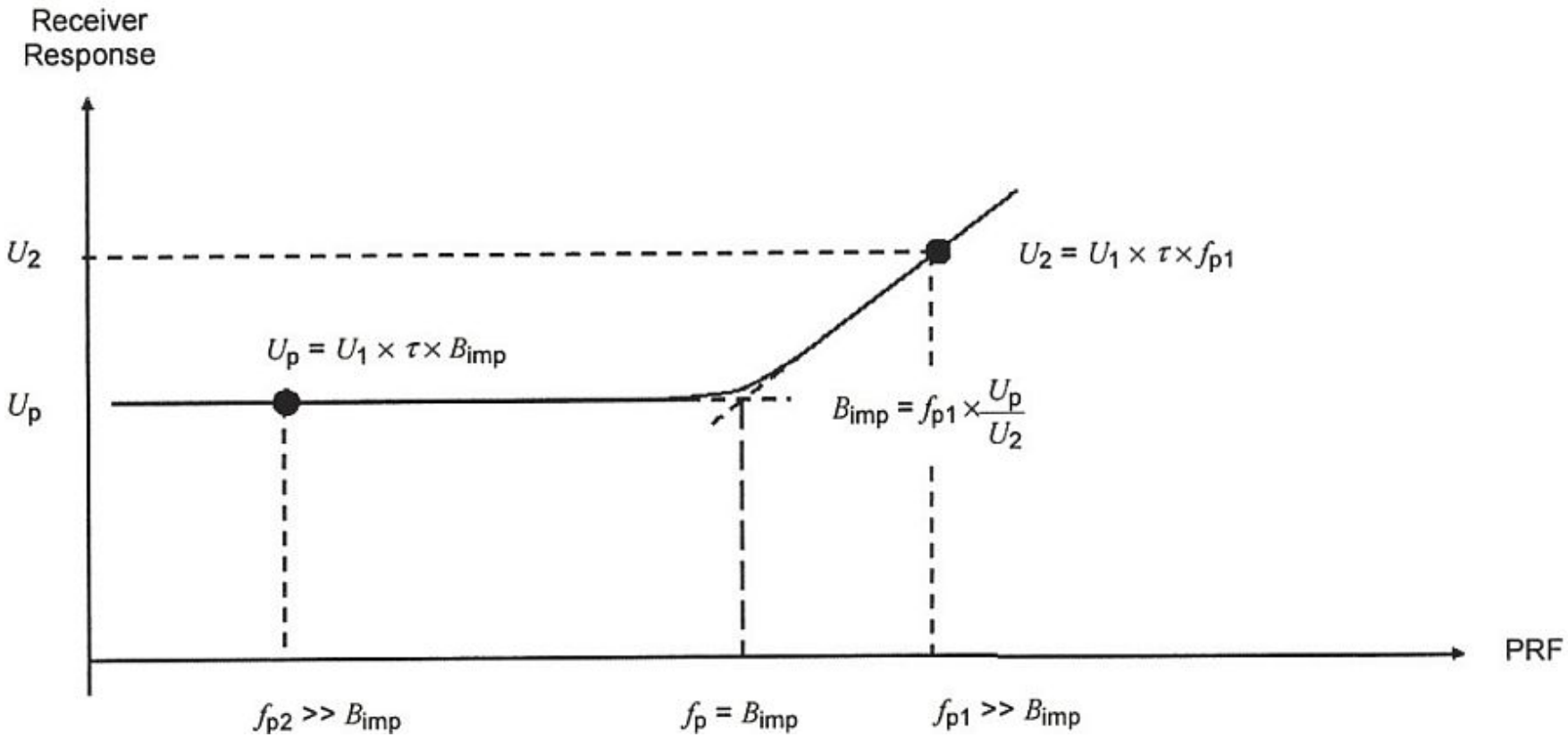

measurement of the impulse bandwidth

- method 2: comparison of the response of B_{imp} to an impulsive signal with the response to a narrow BW to the same signal

- for cases when the pulse generator amplitude is dependent on prf
- same principle as method 1, instead of high prf signal, the 2nd measurement is made with a filter much narrower than the prf

$$D = \frac{U_k}{f_p}$$

measured voltage of 1 spectral line

pulse repetition frequency

$$B_{narrow} << f_p << B_{imp}$$

Contents

- usually given in the Service (Maintenance) manual
- instrument-specific settings recommended
- example R&S ESVN40 receiver:

Error with pulses:

Test setup: Connect pulse generator to RF input of ESN/ESVN.

Pulse frequency	100 Hz
Level	80 dBµV/MHz ±0.1 dB

pulse generation method not specified

Settings on the ESN/ESVN:

RF ATT	10 dB
Mode	Low Noise
Detector	QP
OP Range	60 dB
Meas Time	500 ms

Test: Check the measuring accuracy at 1 MHz and 100 MHz.

Nominal level at 1 MHz	33 dBµV ±1 dB
at 100 MHz	50 dBµV ±1 dB

- example R&S ESVN40 receiver (cont.):

Error with sinusoidal signals:

Test setup: Connect signal generator to RF input of ESN/ESVN.
Level ..... 90 dBµV ±0.1 dB

Settings on the ESN/ESVN:
Attenuation ..... Auto
Mode ..... Low Noise
Detector ..... QP
Op Range ..... 30 dB
Meas Time ..... 500 ms

Test: Check the measuring accuracy at 1 MHz and 100 MHz.
Nominal level ..... 90 dBµV ±1 dB

- example R&S ESVN40 receiver (cont.):

Quasi-peak weighting curve:

Test setup: Connect pulse generator to RF input of ESN/ESVN.
Level ..... 80 dBµV/MHz ±0.1 dB

Settings on the ESN/ESVN:
Frequency ..... 1 MHz and 100 MHz
RF ATT ..... 0 dB
Mode ..... Low Noise
Detector ..... QP
Op Range ..... 60 dB
Meas Time ..... 2 s

Test: Measure the level on the ESN/ESVN depending on the pulse frequency of the pulse generator according to the following tables. The reference value is the level at 100 Hz.

- example R&S ESVN40 receiver (cont.):

- IF bandwidths
- IF gain and linearity
- shape factor of IF filters

+ other (non-QP related) tests

- example R&S ESPI receiver: use of a modulated RF pulse

Test setup:

- Connect TTL output of function generator with pulse modulation input of the signal generator.
- Connect RF output of signal generator to RF input of ESPI

Pulse generator settings:	- Frequency	128 MHz
	- Level	-10 dBm
	- Modulation	Pulse
Function generator settings:	- Waveform	Pulse Continue
	- Pulse width	5 µs
	- Period	40 ms

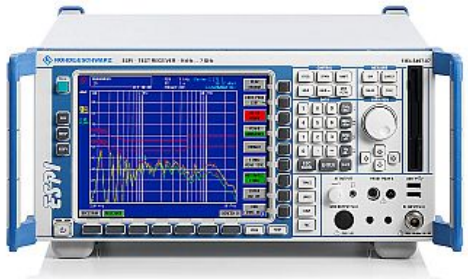

pulse parameters chosen so that they satisfy the needed impulse area at the given RF frequency

- example R&S ESPI receiver (cont.):

CISPR Band A

ESPI settings:	- [**BW** : 200 Hz]
Reference measurement:	The measured level is indicated with the reading 'LEVEL QP' (= reference value L_{Ref}).
Function generator settings:	Period (= 1/ f_P): see table of performance test report for values of f_P.
Measurement of weighting curve:	The measured level is indicated with the reading 'LEVEL QP' (L_{Mes}).
Evaluation:	The difference between level L_{Mes} and the value recorded in the reference measurement L_{Ref} is to be determined as follows: $\Delta L = L_{Mes} - L_{Ref}$

f_p = 25 (ref.), 100, 60, 10, 5, 2, 1 (band A)
f_p = 100 (ref.), 20, 10, 2, 1 (bands B, C/D)

- example R&S ESIB receiver, pulse generator requirements:

CISPR bands	A, B, C/D
level at frequency f	
101 kHz	> 114.6 dBµV / MHz
1.1 MHz	> 80 dBµV / MHz
101 MHz	> 80 dBµV / MHz

⇒ important to characterize the pulse generator in the whole bandwidth, as different receivers have different IF frequencies and pulse area requirements

- example HP 8590 EM receiver (obsolete):

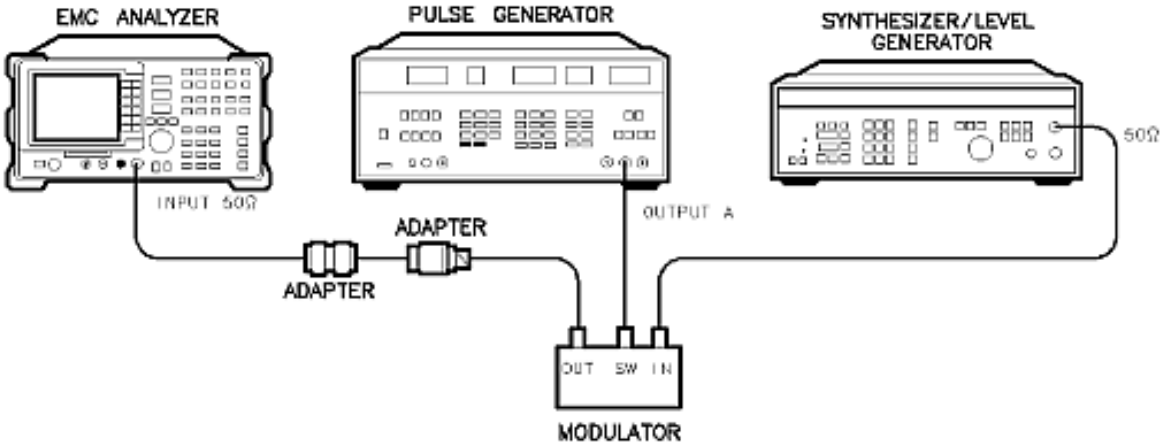

Parameters:

LEE	3 ns
TRE	3 ns
HIL	+2 V
LOL	+1.8 V
DEL	0 ns

Output Mode: Enabled

Channel A	50 Ω
Channel A	NORM

EMPIR project "15RPT01 Development of RF and microwave metrology capability"
http://rfmw.cmi.cz/

Thank you for attention