Uncertainty Evaluation of A Power Sensor Calibration

Murat Celep, UME
Martin Hudlička, CMI

Contact: murat.celep@tubitak.gov.tr

- Why do we need uncertainty?

When reporting the result of a measurement of a physical quantity, it is obligatory to provide the quantitative indication of the quality of the result and its reliability.

The main indicator of the quality and reliability of the measurement result is the uncertainty.

- Generally 2 methods are used in metrology
  - **GUM Uncertainty Framework (GUF)** based on document **Guide to Expression of Uncertainty in Measurement** (GUM), 1995
    - GUM is based on the law of propagation of uncertainty
  - **Monte Carlo** method based on document **Evaluation of measurement dat – Suplement 1 to the "Guide to the expression of uncertainty in measurement"– Propagation of distributions using a Monte Carlo method**, 2008
    - MCM is based on the propagation of distribution

documents online

http://www.bipm.org/en/publications/guides/gum.html

- The *standard uncertainty* of the result of a measurement is obtained from the values of a number of other quantities.

  It is called also combined standard uncertainty and denoted by u_c.

- It is the estimated standard deviation associated with the result and is equal to the positive square root of the *combined variance* obtained from all variance and covariance components.

- The *combined standard uncertainty* u_c (y) is the positive square root of the combined variance u_c^2(y), which is given by

$$u_c^2(y) = \sum_{i=1}^{N} \left(\frac{\partial f}{\partial x_i} \right)^2 u^2(x_i)$$

Where,

$$Y = f(X_1, X_2, \ldots, X_N)$$

Each u(x) is a standard uncertainty (Type A or Type B evaluation).

Type A Evaluation of Standard Uncertainty:

Method of evaluation of uncertainty by the statistical analysis of series of observations.

Experimental (type A) standard uncertainty of the mean is

$$u(s) = \frac{1}{\sqrt{n}} \cdot \sqrt{\frac{1}{n-1} \sum_{i=1}^{n} \left(X_i - \overline{X}\right)^2}$$

n: number of observation
X_i: n^{th} observed value
$\overline{x}$: Average of the n observation

Type B Evaluation of Standard Uncertainty:

Method of evaluation of uncertainty by means of other than the statistical analysis of series of observations. Type B standard uncertainty may include,

- previous measurement data
- experience with or general knowledge of the behaviour and properties of relevant materials and instruments
- manufacturer's specifications
- Data provided in calibration and other certificates
- uncertainties assigned to reference data taken from handbooks

- Other parts ($\delta f / \delta X_i$) of the uncertainty are based on a first-order Taylor series approximation of the function $Y = f(X_1, X_2, \ldots X_n)$.

- These derivatives, often called *sensitivity coefficients*, describe how the output estimate *y* varies with changes in the values of the input estimates.

$$u_c^2(y) = \sum_{i=1}^{N} \left[c_i u(x_i) \right]^2 \equiv \sum_{i=1}^{N} u_i^2(y)$$

where

$$c_i \equiv \partial f / \partial x_i, \quad u_i(y) \equiv |c_i| u(x_i)$$

– Effective degrees of freedom:

if the *probability distribution* of y is not known exactly, central limit theorem can be used. It assumes that $(y - Y)/u(y)$ has the Student's t-distribution with effective degrees of freedom (ν_{eff}).

ν_{eff} obtained from the Welch-Satterthwaite equation.

$$\nu_{\text{eff}} = \frac{u_c^4(y)}{\sum_{i=1}^{N} \frac{u_i^4(y)}{\nu_i}}$$

– Expended uncertinty

$$U(y) = t_p\, u(y) = k\, u(y)$$

Table G.2 — Value of $t_p(\nu)$ from the t-distribution for degrees of freedom ν that defines an interval $-t_p(\nu)$ to $+t_p(\nu)$ that encompasses the fraction p of the distribution

Degrees of freedom	Fraction p in percent					
ν	68,27 [a)]	90	95	95,45 [a)]	99	99,73 [a)]
1	1,84	6,31	12,71	13,97	63,66	235,80
2	1,32	2,92	4,30	4,53	9,92	19,21
3	1,20	2,35	3,18	3,31	5,84	9,22
4	1,14	2,13	2,78	2,87	4,60	6,62
5	1,11	2,02	2,57	2,65	4,03	5,51
6	1,09	1,94	2,45	2,52	3,71	4,90
7	1,08	1,89	2,36	2,43	3,50	4,53
8	1,07	1,86	2,31	2,37	3,36	4,28
9	1,06	1,83	2,26	2,32	3,25	4,09
10	1,05	1,81	2,23	2,28	3,17	3,96
11	1,05	1,80	2,20	2,25	3,11	3,85
12	1,04	1,78	2,18	2,23	3,05	3,76
13	1,04	1,77	2,16	2,21	3,01	3,69
14	1,04	1,76	2,14	2,20	2,98	3,64
15	1,03	1,75	2,13	2,18	2,95	3,59

– variances of normal and rectangular distributions

probability distribution	z_{max}	k	probability distribution	z_{max}	k
normal (Gauss) 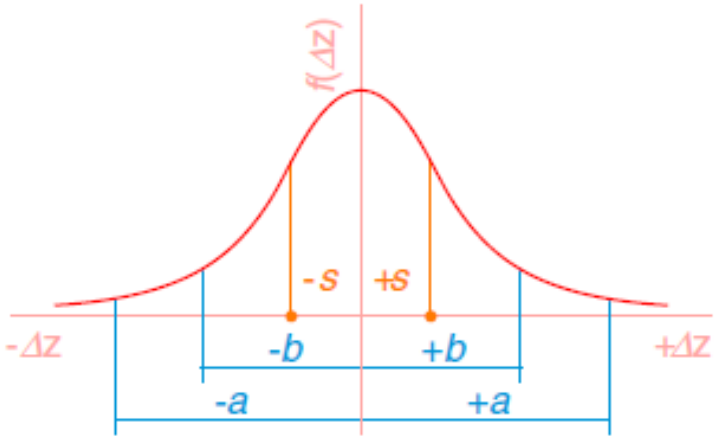	a	3	uniform - rectangular 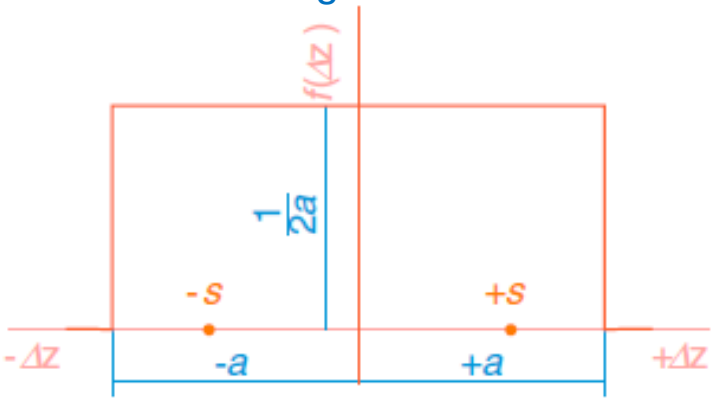	a	$\sqrt{3}$ 1,73
	b	2			

– If the inputs of Y are correlated

$$u_c^2(y) = \sum_{i=1}^{N}\sum_{j=1}^{N}\frac{\partial f}{\partial x_i}\frac{\partial f}{\partial x_j}u(x_i, x_j) = \sum_{i=1}^{N}\left(\frac{\partial f}{\partial x_i}\right)^2 u^2(x_i) + 2\sum_{i=1}^{N-1}\sum_{j=i+1}^{N}\frac{\partial f}{\partial x_i}\frac{\partial f}{\partial x_j}u(x_i, x_j)$$

- GUF method scheme

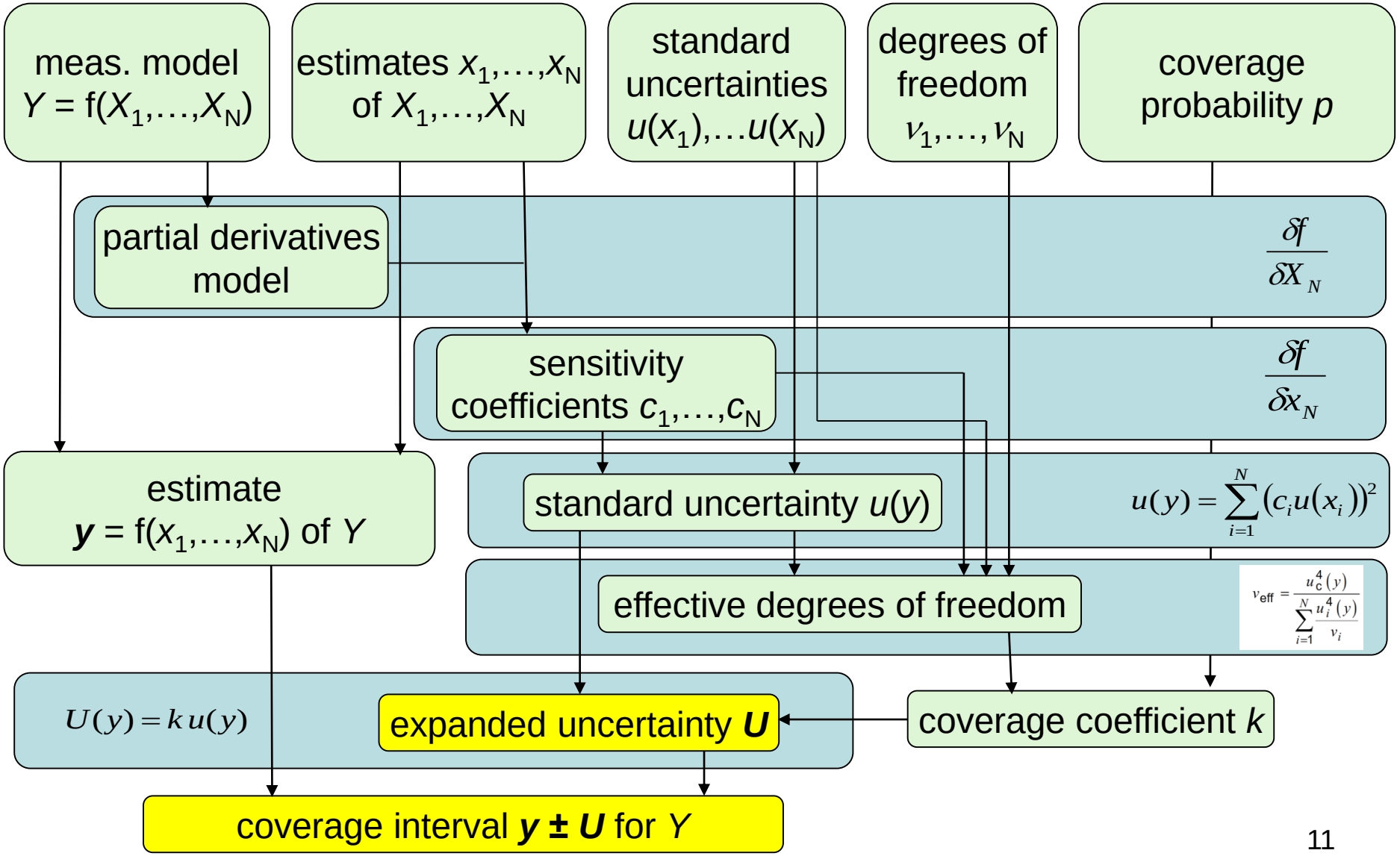

Uncertainty evaluation for calibration factor (CF) measurement

– Simple CF measurement;

Mismatch ratio M=1, i.e. Standard and DUT power sensor mismatch are assumed to be equal.

$$CF_{DUT} = CF_{std} \frac{P_{DC,DUT}}{P_{DC,std}} M \qquad M = \frac{M_{DUT}}{M_{std}} = \frac{\left|1-\Gamma_{DUT}\Gamma_G\right|^2}{\left|1-\Gamma_{std}\Gamma_G\right|^2}$$

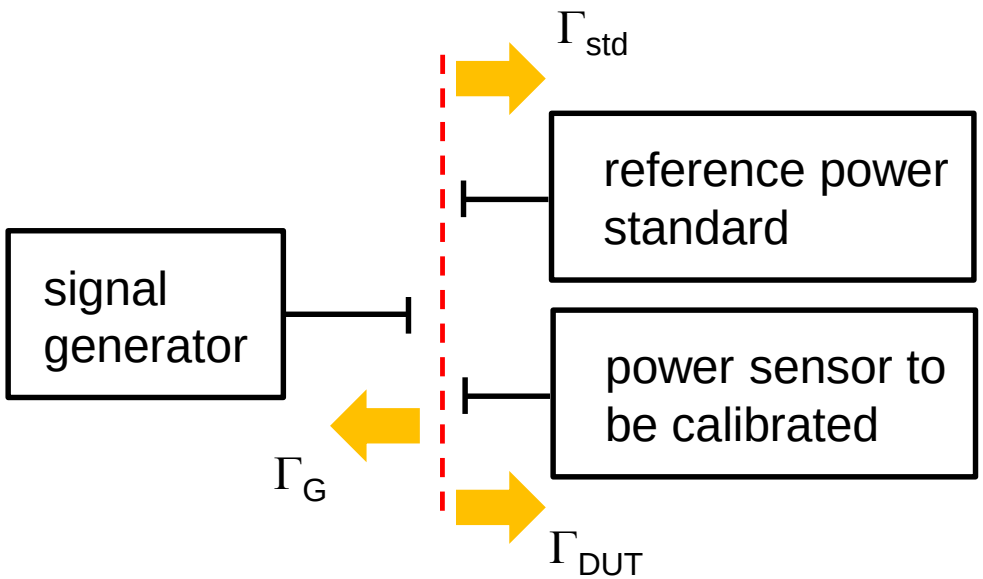

– Simple CF measurement;

$$CF_{DUT} = CF_{std} \frac{P_{DC,DUT}}{P_{DC,std}} M$$

Mismatch uncertainty,

$$u^2(M) = 2|\Gamma_G||\Gamma_{std}| + 2|\Gamma_G||\Gamma_{DUT}| \qquad \text{U-distribution}$$

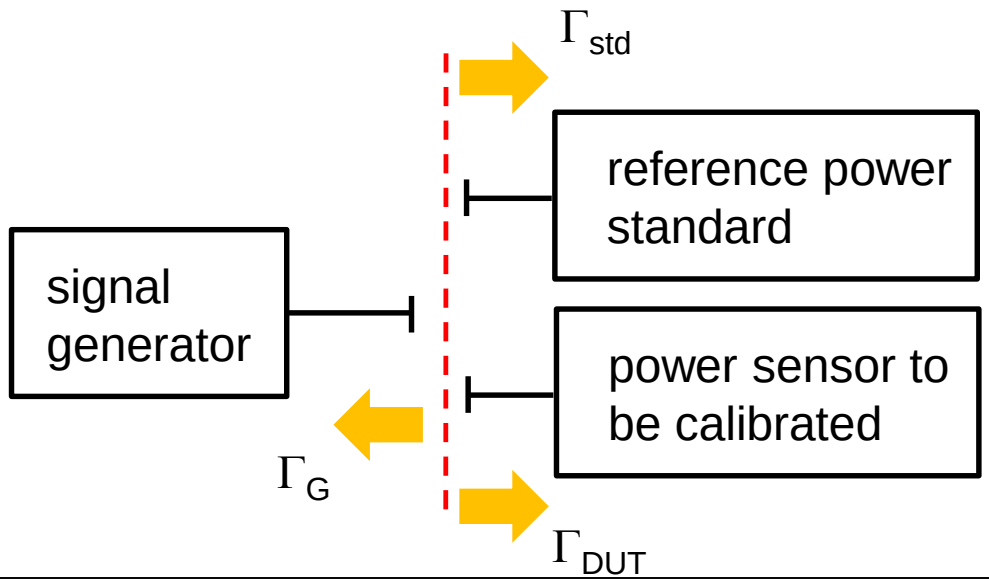

- Simple CF measurement – **mismatch correction**
  - complex reflection coefficients considered
  - real + imaginary is better for numerical calculations compared to the magnitude + phase

$$CF_{DUT} = CF_{std} \frac{P_{DC,DUT}}{P_{DC,std}} \frac{\left|1-\Gamma_{DUT}\Gamma_G\right|^2}{\left|1-\Gamma_{std}\Gamma_G\right|^2}$$

$$a = \mathrm{Re}\{\Gamma_{std}\} \qquad d = \mathrm{Im}\{\Gamma_{DUT}\}$$
$$b = \mathrm{Im}\{\Gamma_{std}\} \qquad e = \mathrm{Re}\{\Gamma_G\}$$
$$c = \mathrm{Re}\{\Gamma_{DUT}\} \qquad f = \mathrm{Im}\{\Gamma_G\}$$

$$CF_{DUT} = CF_{std} \frac{P_{DC,DUT}}{P_{DC,std}} \frac{1 + 2df - 2ce + c^2e^2 + d^2e^2 + c^2f^2 + d^2f}{1 + 2bf - 2ae + a^2e^2 + b^2e^2 + a^2f^2 + b^2f^2}$$

- Simple CF measurement – **mismatch correction**
  - sensitivity coefficients:

$$\frac{\delta CF_{DUT}}{\delta CF_{std}}, \frac{\delta CF_{DUT}}{\delta P_{DC,std}}, \frac{\delta CF_{DUT}}{\delta P_{DC,DUT}}$$

$$\frac{\delta CF_{DUT}}{\delta a}, \frac{\delta CF_{DUT}}{\delta Pb}, \ldots, \frac{\delta CF_{DUT}}{\delta f}$$

  - normal probability distribution is assumed for real and imaginary parts of the reflection coefficients

- CF measurement– **power splitter and mismatch correction**

$$CF_{DUT} = CF_{std} \frac{P_{DC,DUT}}{P_{DC,std}} \frac{P_{3std}\left|1-\Gamma_{DUT}\Gamma_G\right|^2}{P_{3DUT}\left|1-\Gamma_{std}\Gamma_G\right|^2}$$

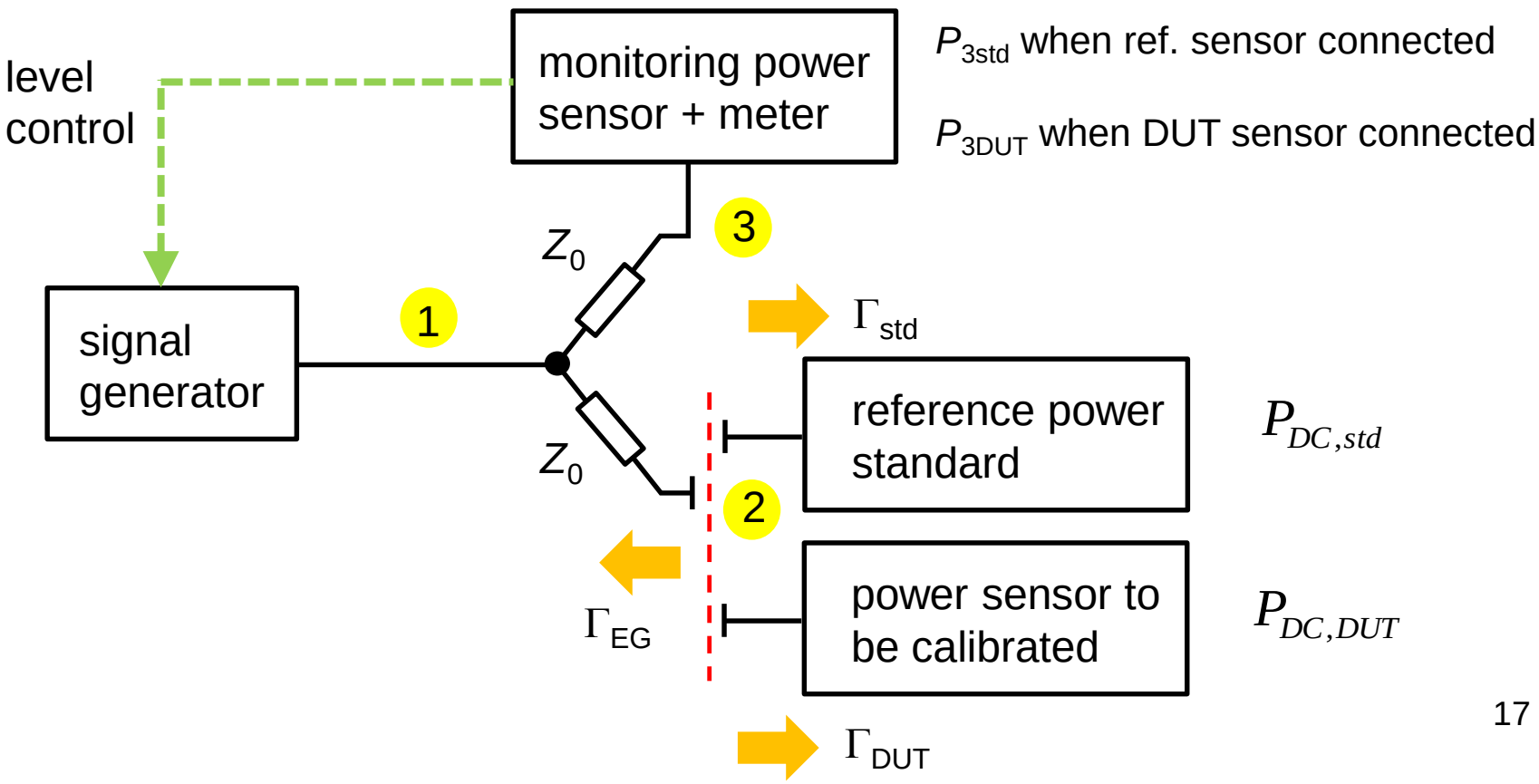

Uncertainty evaluation

$$CF_{DUT} = CF_{std} \frac{P_{DC,DUT}}{P_{DC,std}} \frac{P_{3std}\left|1-\Gamma_{DUT}\Gamma_G\right|^2}{P_{3DUT}\left|1-\Gamma_{std}\Gamma_G\right|^2}$$

CF_{std}: Calibration factor of the standard power sensor/thermistor mount
$P_{DC,DUT}$: Measured power from the power meter (PM) connected to the DUT sensor
P_{3DUT}: Measured power from the monitor PM when DUT sensor measured
$P_{DC,std}$: Measured power from the PM connected to the STD sensor
P_{3std}: Measured power from the monitor PM when STD sensor measured
Γ_{DUT}: Reflection coefficient of the DUT sensor
Γ_{std}: Reflection coefficient of the STD sensor
Γ_G: Reflection coefficient of the DUT and STD sensor connection port

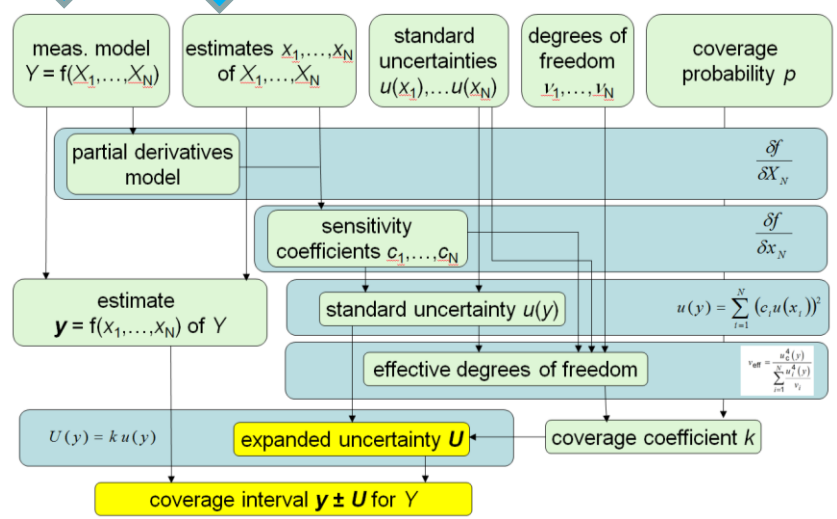

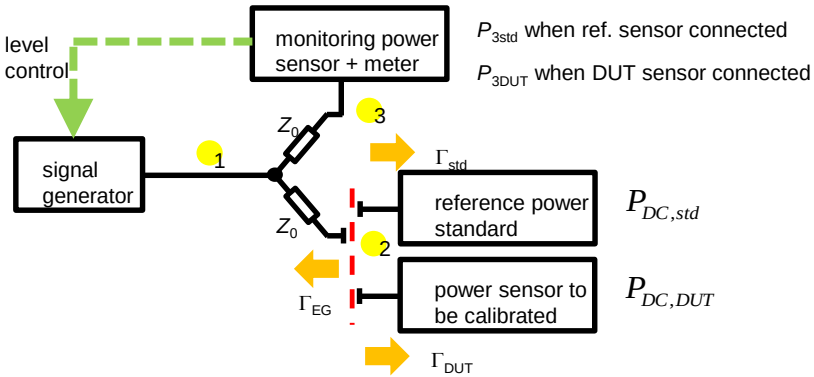

Uncertainty evaluation

$u(CF_{std})$: Uncertainty of the calibration factor of the standard power sensor/thermistor mount
$u(P_{DC,DUT})$: Uncertainty of the measured power from the power meter (PM) connected to the DUT sensor
$u(P_{3DUT})$: Uncertainty of the measured power from the monitor PM when DUT sensor measured
$u(P_{DC,std})$: Uncertainty of the measured power from the PM connected to the STD sensor
$u(P_{3std})$: Uncertainty of the measured power from the monitor PM when STD sensor measured
$u(\Gamma_{DUT})$: Uncertainty of the reflection coefficient of the DUT sensor
$u(\Gamma_{std})$: Uncertainty of the reflection coefficient of the STD sensor
$u(\Gamma_G)$: Uncertainty of the reflection coefficient of the DUT and STD sensor connection port

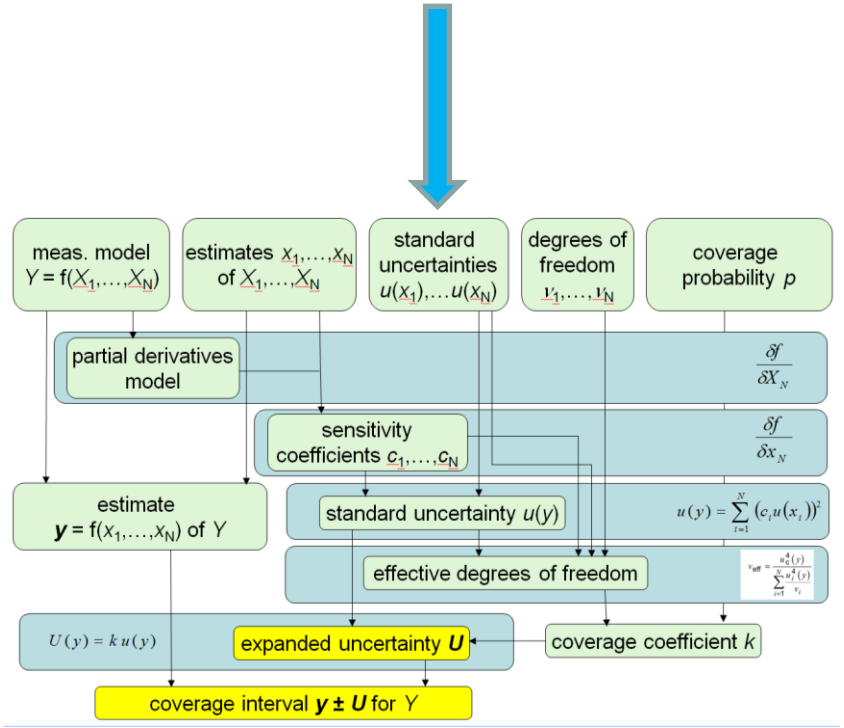

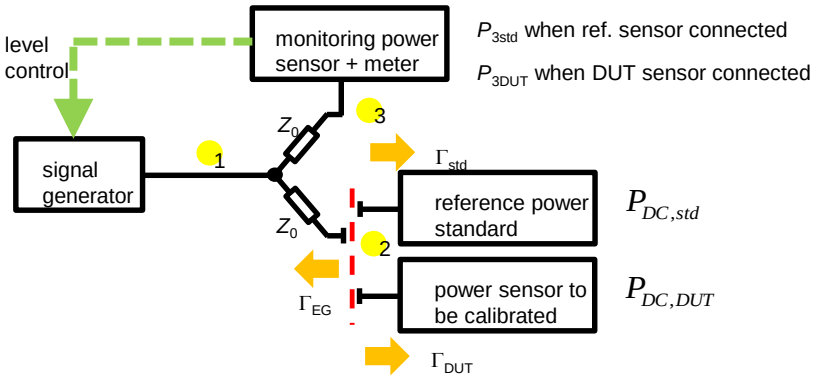

Uncertainty evaluation

$$CF_{DUT} = CF_{std} \frac{P_{DC,DUT}}{P_{DC,std}} \frac{P_{3std}}{P_{3DUT}} \frac{M_D}{M_s}$$

$$MM = \frac{M_D}{M_s} = \frac{\left|1-\Gamma_{DUT}\Gamma_G\right|^2}{\left|1-\Gamma_{std}\Gamma_G\right|^2}$$

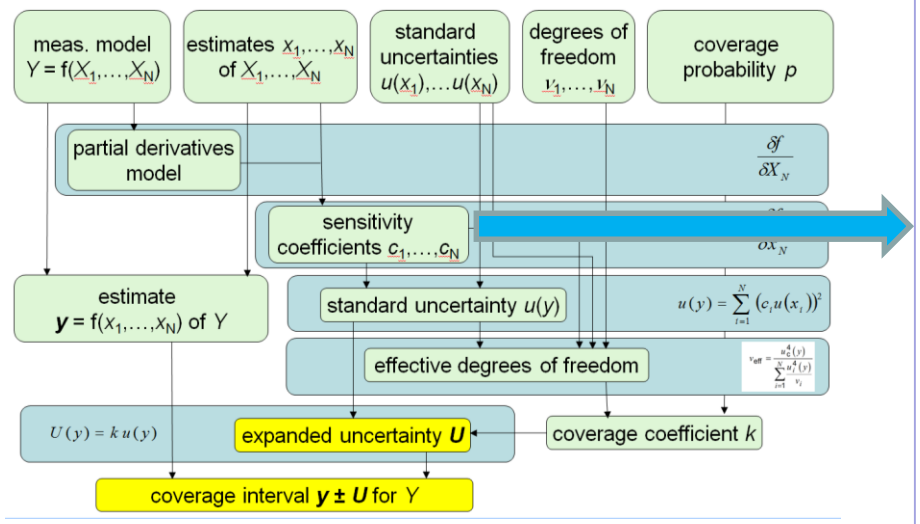

$$c_{CFSTD} = \frac{\partial CF_{DUT}}{\partial CF_{STD}} = \frac{CF_{DUT}}{CF_{STD}}$$

$$c_{PDC,DUT} = \frac{\partial CF_{DUT}}{\partial P_{DC,DUT}} = \frac{CF_{DUT}}{P_{DC,DUT}}$$

$$c_{PDC,std} = \frac{\partial CF_{DUT}}{\partial P_{DC,std}} = -\frac{CF_{DUT}}{P_{DC,std}}$$

$$c_{P3DUT} = \frac{\partial CF_{DUT}}{\partial P_{3DUT}} = -\frac{CF_{DUT}}{P_{3DUT}}$$

$$c_{P3std} = \frac{\partial CF_{DUT}}{\partial P_{3std}} = \frac{CF_{DUT}}{P_{3std}}$$

$$c_{MM} = \frac{\partial CF_{DUT}}{\partial MM} = \frac{CF_{DUT}}{MM}$$

Uncertainty evaluation

$$CF_{DUT} = CF_{std} \frac{P_{DC,DUT}}{P_{DC,std}} \frac{P_{3std}}{P_{3DUT}} MM$$

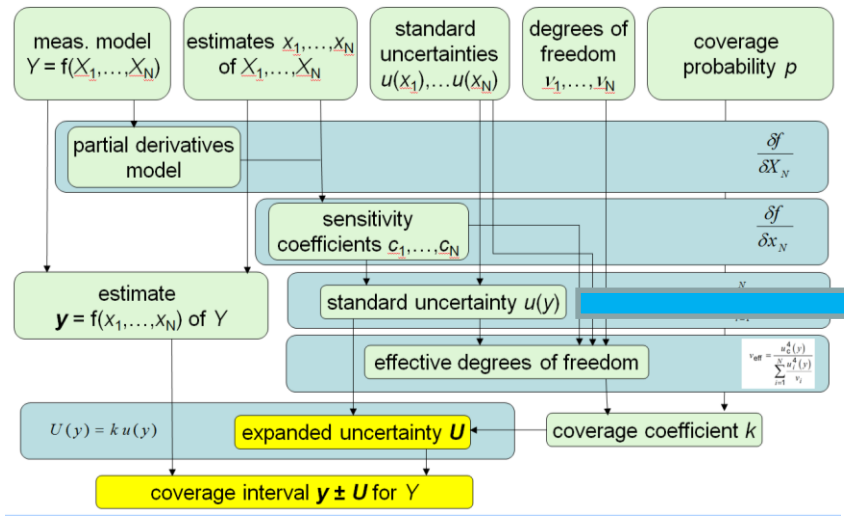

.

$$u^2(CF_{DUT}) = c_{CFSTD}{}^2 u^2(CF_{std}) + c_{PDC,DUT}{}^2 u^2(P_{DC,DUT})$$

$$+ c_{PDC,std}{}^2 u^2(P_{DC,std}) + c_{P3std}{}^2 u^2(P_{3std})$$

$$+ c_{P3DUT}{}^2 u^2(P_{3DUT}) + c_{MM}{}^2 u^2(MM)$$

Uncertainty evaluation

$$CF_{DUT} = CF_{std} \frac{P_{DC,DUT}}{P_{DC,std}} \frac{P_{3std}}{P_{3DUT}} MM$$

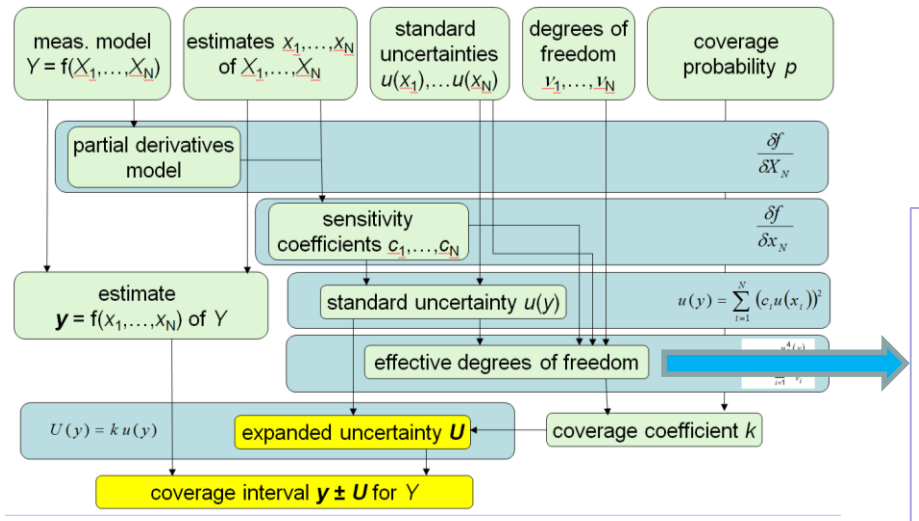

$$\nu_{\text{eff}} = \frac{u_c^4(y)}{\sum_{i=1}^{N} \frac{u_i^4(y)}{\nu_i}}$$

If ν_{eff} is greater than 50 t_p (=k) can be assumed 2 for %95,45.

Uncertainty evaluation

$$CF_{DUT} = CF_{std} \frac{P_{DC,DUT}}{P_{DC,std}} \frac{P_{3std}}{P_{3DUT}} MM$$

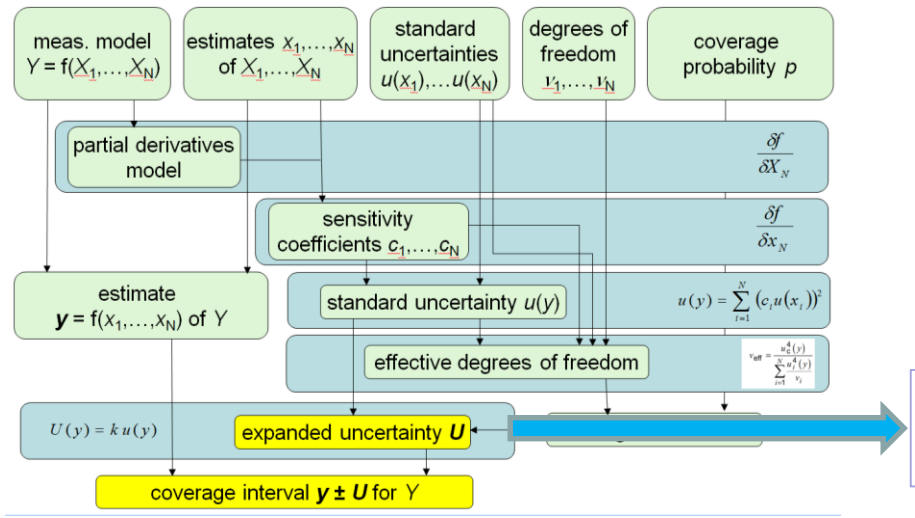

$$U(CF_{DUT}) = k\,u(CF_{DUT})$$

Uncertainty evaluation

$$CF_{DUT} = CF_{std} \frac{P_{DC,DUT}}{P_{DC,std}} \frac{P_{3std}}{P_{3DUT}} MM$$

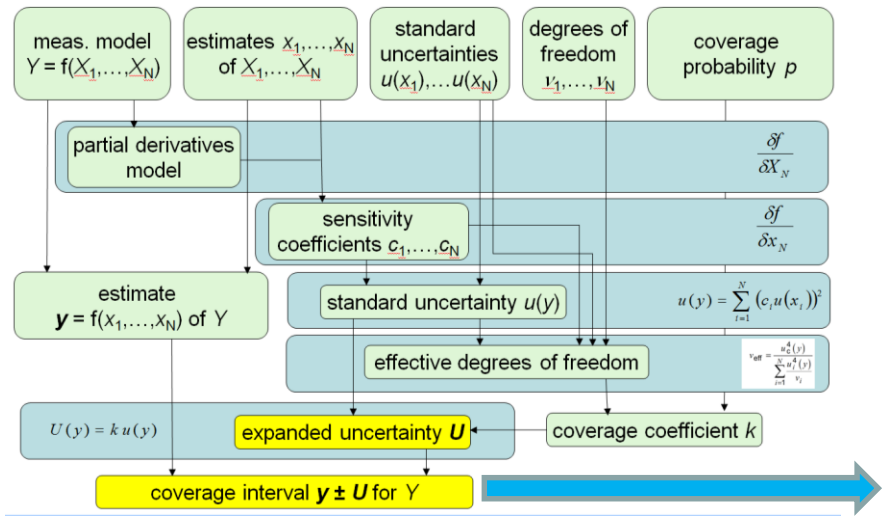

$$CF_{DUT} \pm U(CF_{DUT})$$

- calibration with an adaptor/attenuator

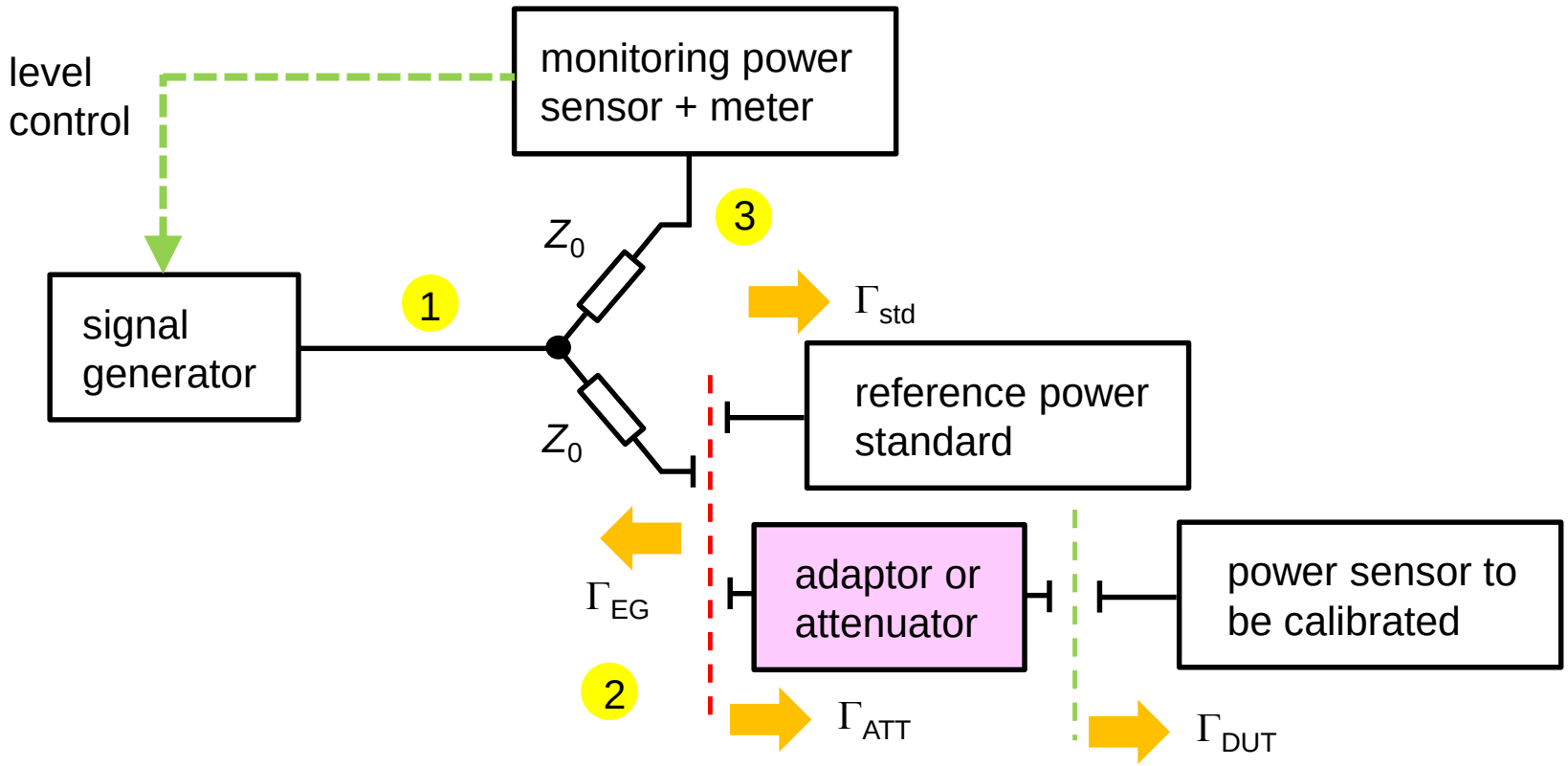

$$CF_{DUT} = CF_{std} \frac{P_{DC,DUT}}{P_{DC,std}} \frac{P_{3std}}{P_{3DUT}} \frac{1}{|S_{21A}|^2} \left| \frac{1-\Gamma_{DUT} S_{22A} - \Gamma_G \Gamma_{A-DUT}}{1-\Gamma_{std}\Gamma_G} \right|^2 \qquad \Gamma_{A-DUT} = S_{11A} + \Gamma_{DUT} S_{21A} S_{12A} - \Gamma_{DUT} S_{11A} S_{22A}$$

- calibration with an attenuator

$$CF_{DUT} = CF_{std}\frac{P_{DC,DUT}}{P_{DC,std}}\frac{P_{3std}}{P_{3DUT}}\frac{1}{|S_{21A}|^2}\left|\frac{1-\Gamma_{DUT}S_{22A}-\Gamma_G\Gamma_{A-DUT}}{1-\Gamma_{std}\Gamma_G}\right|^2$$

=MM, Other parameters

$$c_{MM} = \frac{\partial CF_{DUT}}{\partial MM}$$

Uncertainty of this part is already discussed

Effect of transmission coefficient of the attenuator

$$c_{S21A} = \frac{\partial CF_{DUT}}{\partial S_{21A}}$$

$u(S_{21A})$: Uncertainty of forward transmission coefficient of the attenuator
$u(S_{12A})$: Uncertainty of reverse transmission coefficient of the attenuator
$u(S_{11A})$: Uncertainty of Port 1 reflection coefficient of the attenuator
$u(S_{22A})$: Uncertainty of Port 2 reflection coefficient of the attenuator

- Connector effect
  - Effect of asymmetry of the connector should be included to the CF measurements

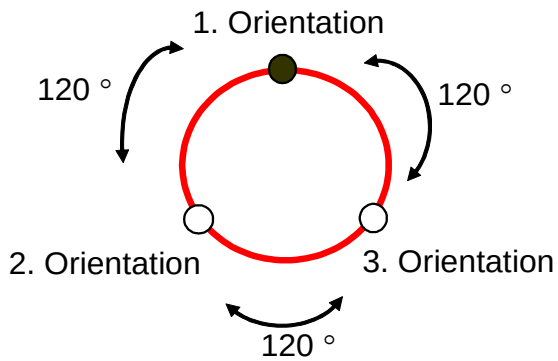

$$\overline{CF}_{DUT} = \frac{1}{N}\sum_{i=1}^{N} CF_{DUT_i}$$

$$u^2_{conn} = \frac{1}{N(N-1)}\sum_{i=1}^{N}\left(CF_{DUT_i} - \overline{CF}_{DUT_i}\right)^2$$

The EMPIR initiative is co-funded by the European Union's Horizon 2020 research and innovation programme and the EMPIR Participating States

EMPIR project "15RPT01 Development of RF and microwave metrology capability"
http://rfmw.cmi.cz/

Thank you for attention

Monte Carlo scheme