The EMPIR initiative is co-funded by the European Union's Horizon 2020 research and innovation programme and the EMPIR Participating States

‘Just-before-test’ VNA verification method for EMC emissions conducted tests

Document Type: Activity report

Authors: Osman Şen, Soydan Çakır, Marc Pous, Marco Azpúrua, Ferran Silva, Manuel Rodríguez Higuero

Activity Partners: TÜBİTAK UME, UPC, INTA

1. Summary

This report was prepared to present the improved just-before-test verification methods and results for both conducted emission and conducted immunity tests. The work in the Section 2 of this report was performed by TUBITAK UME whereas the work in the Section 3 was performed by UPC. The literature study and the review of the report were performed by INTA.

2. TÜBITAK UME research and results

a. Introduction

All equipment placed on the European Market has to fulfil the essential requirements of the European EMC Directive. The normal approach is to show compliance with basic test requirements and testing electrical and electronic products is a must before entering the market. Conducted emission and immunity tests, which are performed as per a variety of standards such as CISPR22 [1], CISPR11 [2], MIL-STD461F [3] and IEC61000-4-6 [4,5], have a very important place to fulfil the EMC requirement. On the other hand, the assurance of the quality of test results must be provided by means of just-before-test verifications and comparison tests in accordance with the quality system standards such as IEC/ISO 17025 [6]. Despite the great necessity of verifications for ensuring correct testing, they are omitted by some EMC laboratories and these laboratories only rely on instrument calibrations realized every year or every two years, which is very risky and unreliable for test quality as instrument calibrations do not prove anything about the integration of the system and connections between the test system parts such as cables, attenuators, transducers. Moreover, most of test standards do not expressly stipulate verifications to be applied before tests. On the other hand, one of the rare standards which require verification before tests is MIL-STD461F [3]. The conducted emission test called CE102 in MIL-STD461F requires the application of a known signal that is 6 dB below the limit to the input of the LISN at 10 kHz 100 kHz, 2 MHz and 10 MHz in turn as shown in Fig. 1 just before the test. At 10 kHz and 100 kHz, a signal generator is connected to the LISN power output through a coaxial “T” connector. An oscilloscope with high input impedance is used to verify the signal level and verify that it is sinusoidal via the “T” connector as the LISN impedance is not around 50 Ω at lower frequencies. At 2 MHz and 10 MHz, the signal generator is directly connected to the LISN power output as the LISN impedance is around 50 Ω at higher frequencies. Thereafter, the measurement receiver is scanned for each frequency in the same manner as a test scan and it is expected that the test software must indicate a level within ± 3 dB of the injected level. If the measured signal levels deviate by more than ± 3 dB, the test is not continued and

the error must be rectified in the test system. Nevertheless, this verification method is able to only verify each LISN separately and is not able to check the whole LISN system as a unit including ground connections, 50 Ω terminators. As a consequence, this method alone is not enough to detect common mode (CM) and differential mode (DM) insidious impedance issues with the LISN system including grounding issues, defective 50 Ω terminators and coaxial cables.

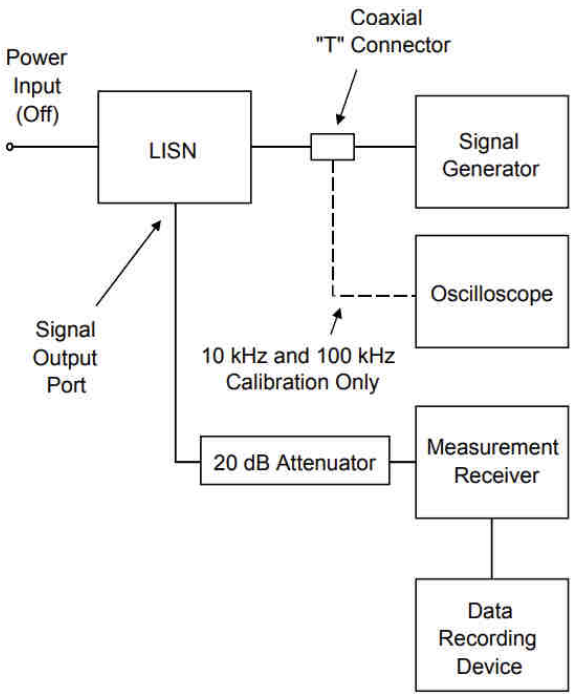

Fig 1. Conducted emission verification setup as per MILSTD461F

Another verification method used by some laboratories is the reference source method. In this method, a reference source which produces a constant broadband signal is tested just before a test and it is expected to have the same conducted emission curve per verification. This method looks more effective than the MIL-STD461F spot frequency application but it may be again inefficient for detecting all impedance issues because the emission values displayed by the test software are defined jointly by CM and DM interference sources inside the EUT, the CM and DM internal impedance of the reference source and the LISN impedance of the system. In other words, there is likelihood that some impedance issues with the LISN system, which are not detected under the current impedance combination of the reference source and the LISN system, become effective while a piece of actual Equipment Under Test (EUT) is being tested. Moreover, reference sources commonly emit only in CM or DM so that one of the impedance modes of the setup may not be checked at all.

In this work, we proposed a just-before-test verification method which employs vector network analyzer (VNA) for a quick measurement of CM and DM impedance values of the

LISN system for conducted emission tests, CM impedance of CDNs for conducted immunity tests and loop impedance of BCI tests. The proposed method reveals all possible impedance-related issues including the most insidious ones, which may not be detected by the aforementioned verifications methods, such as breakdowns inside LISNs or CDNs, problematic 50 Ω terminators or cables, weak grounding of LISNs, CDNs and EUT to the ground floor. Additionally, in this work, we also focused specially on the impact of 50 terminators used to terminate the decoupling CDNs in conducted immunity tests performed as per IEC61000-4-6. In the earlier version of the standard [5], the RF ports of all CNDs which are used for decoupling purposes are terminated with 50 Ω. However, in the new version of the standard [4], the RF port of one of the decoupling CDNs is terminated with 50 Ω and the RF ports of all the others are left unterminated. For that reason, we also investigated possible discrepancies, which may arise in the test results due to the use of the different versions of the standard, by means of loop impedance measurements and response of a piece of actual EUT chosen as an example.

b. Theory and experimental setup

The verification method proposed in our research is based on quick CM and/or DM impedance measurements of LISNs, CDNs and loop impedance measurements just before tests. The impedance measurement method and CM/DM impedance measurement setups that we employed in this research are given in [7] in detail and the general impedance measurement setup is simply shown in Fig. 2.

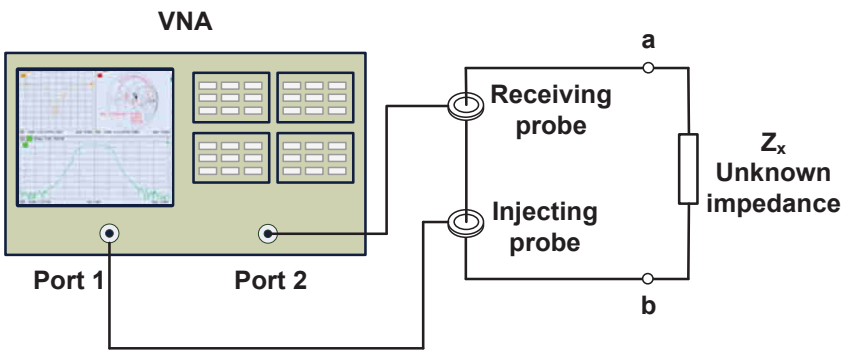

Fig. 2. Impedance measurement by using two current probes [7]

This impedance measurement method uses VNA (Manufacturer: Keysight Technologies, Model: E5061B in our case), two current probes and precision known impedance. A typical VNA, which can cover the frequency range of interest and can provide a received signal which is at least 15 dB above the noise floor, is enough for this impedance measurement. This method yields the value of the unknown impedance which is depicted in Fig.2 as well as the cable impedance that includes the effects of the used current probes and, if any, other measurement components. Emissions coming from EUT are classified as CM and DM and

measured in laboratory environment with the use of LISNs. The circuit models of conducted emission measurements for CM and DM are simply presented in Fig.3. As seen in Fig.3, the interference sources inside the EUT are indicated as V_{EUT_CM} and V_{EUT_DM} for the CM and DM circuit models. Z_{EUT_CM} and Z_{EUT_DM} are the internal impedance values of the EUT for the CM and DM circuit models respectively. Z_{SETUP_CM} and Z_{SETUP_DM} are the impedance values of the used cables including employed measurement components such as current probes and so on. These figures show the reference setup installed with two LISNs in laboratory environment. The impedance of each LISN is depicted as 50 Ω. The LISNs become parallel in the CM circuit model and series in the DM model [8]. The flowing CM current and the induced CM voltage just at the LISN system in Fig.3(a) are depicted as I_{CM_REF} and V_{CM_REF} respectively for the CM model. Likewise, for the reference DM model, the flowing DM current and the induced DM voltage just at the LISN system in Fig. 3(b) are depicted as I_{DM_REF} and V_{DM_REF} respectively.

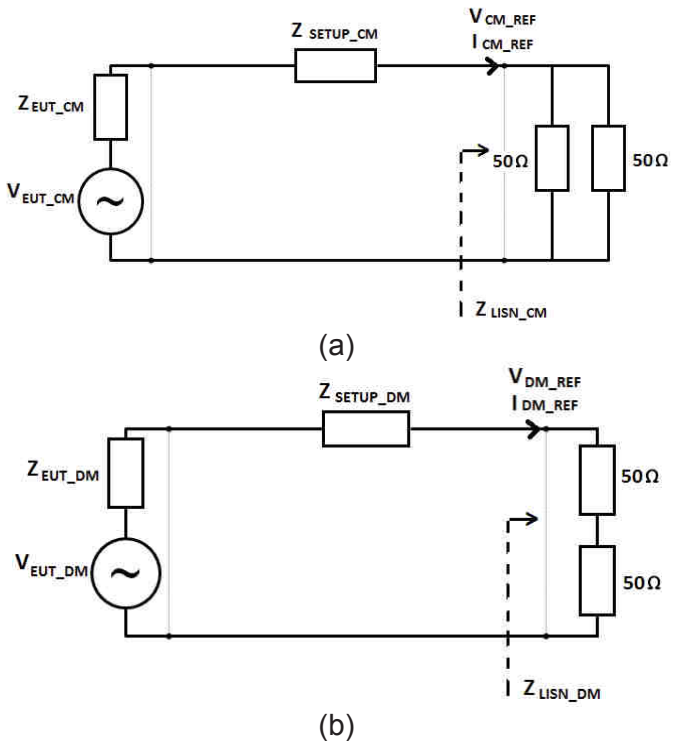

Fig 3. Circuit models of conducted emission measurements in laboratory environment (a) CM circuit model, (b) DM circuit model

In this work, the just-before-test verification for conducted emission tests is based on the measurement of CM and DM impedance of the LISN system at its mains input as seen in Fig.4(a). The measurement results are then compared with the expected reference curves. This verification directly reveals, if any, issues with internal structure of LISNs or with used 50 terminators or with grounding of LISNs, which may not be detected through the other known verification methods. To be able detect all possible issues related to the grounding in addition

to the internal LISN and termination issues; the ground cable of the impedance measurement setup must be connected to the ground floor in front of the LISNs, not to the ground of the LISN EUT power outlet.

To demonstrate the effectiveness of the verification method, while the reference was the case in which the LISNs and their terminators were healthy and the LISNs were securely bonded to the ground floor, we formed the following issue scenarios by means of military LISNs (Manufacturer: Solar Electronics, Model: 9233-50-TS-50-N) seen in Fig.4(a);

LISN and termination issue scenarios:

- One of the LISNs is defective
- Both of the terminators are defective (open-circuited).
- Both of the terminators are defective. One of the terminators is open-circuited and the other is short-circuited.
- Both of the terminators are defective (short-circuited).
- One of the terminators is defective (short-circuited). The other is healthy.

LISN grounding issue scenarios:

- The LISNs' grounding to the ground floor is broken and the LISNs are placed on pieces of paper, which simulates very poor grounding (see Fig. 4(b))
- The LISNs are elevated by 5 cm from the ground floor and connected to the ground floor by thin and weak ground cables (see Fig. 4(c))
- The LISNs are elevated by 5 cm from the ground floor and connected to the ground floor by thick cables (see Fig. 4(d))

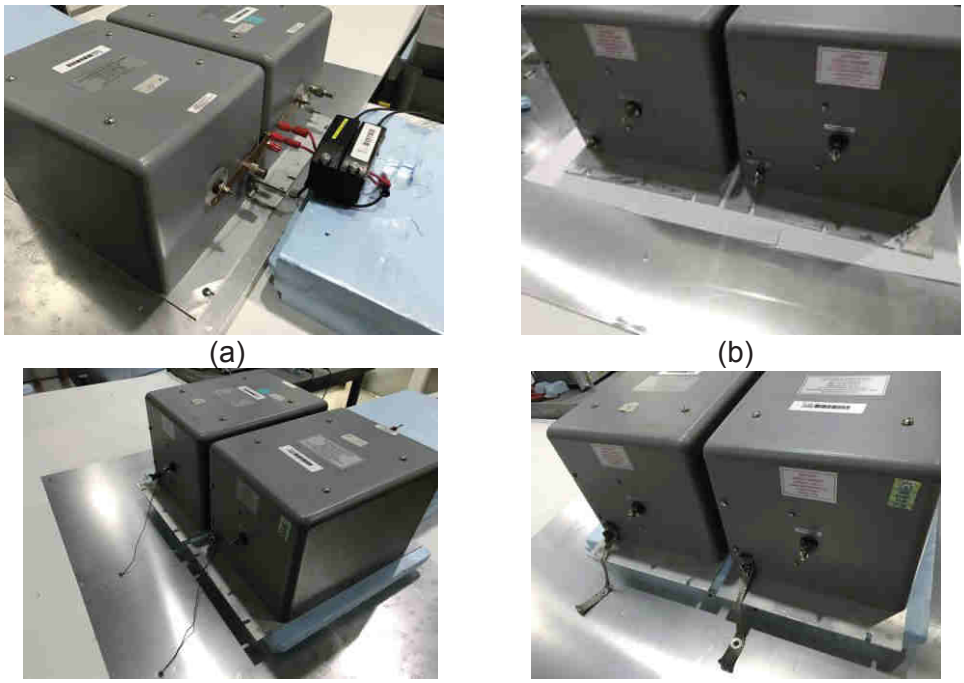

Fig 4. Conducted emission grounding issue scenarios (a) reference setup, (b) very poor grounding with paper, (c) grounding with thin cable, (d) grounding with thick cable

Fig 5. Civil LISN with VDE/CISPR switch circled in red

Finally for the conducted emission just-before-test verification, we also investigated the impact of the “protective ground simulation circuit” switch which exists on some civil LISNs as per VDE0877 Part1 [9] because it may be left ON accidentally during the test while intending to perform a test as per CISPR standards. For this part of the research, we employed a civil LISN (Manufacturer: Schaffner, Model: MN2050D) that includes a VDE/CISPR switch on it (see Fig. 5). To be able detect the issues related to this special switch; the ground cable of the impedance measurement setup must be connected specifically to the ground of the EUT power outlet of the LISN, not to the ground of the test table.

In the second step of the research, we focused on just-before-test verifications of conducted immunity testing. The standard IEC61000-4-6 requires a setup presented in Fig.6. The conducted immunity test setup circuit model installed in laboratory is shown in Fig.7 [10].

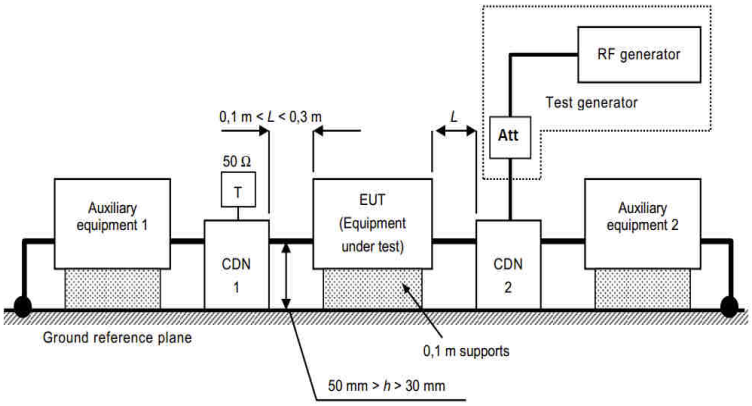

Fig 6. Conducted immunity test setup with CDNs [4]

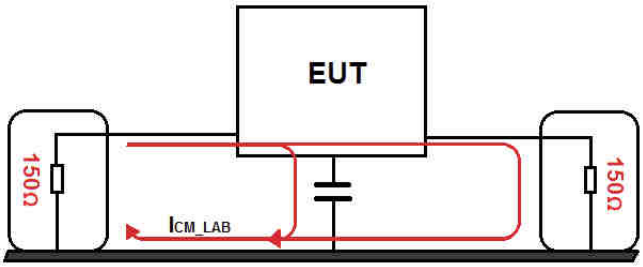

Fig 7. General conducted immunity test setup equivalent circuit

As seen in Fig.7, the test loop includes two pieces of 150 Ω impedance and EUT. Unlike the conducted emission testing, the just-before-test verification for conducted immunity testing is based only on the CM loop impedance measurement of each CDN seen in the test setup in Fig.6. Through this verification setup, similar to the conducted emission verification, CDN-related or grounding issues can be easily detected. While the ideal setup was a well-grounded CDN with a proper 50 Ω terminator as seen in Fig.8(a), the issue scenarios were formed as follows;

- The RF port of the CDN is left open
- The terminator of the CDN RF port is defective (short-circuited)
- The CDN is placed on the ground floor through a piece of paper that simulates very poor grounding. (See Fig.8(b))
- The CDN is elevated by 10 cm from the floor and connected to the ground floor with a thin and weak ground cable. (See Fig.8(c))
- The CDN is elevated by 10 cm from the floor and connected to the ground floor with a thick regular ground cable. (See Fig.8(d))

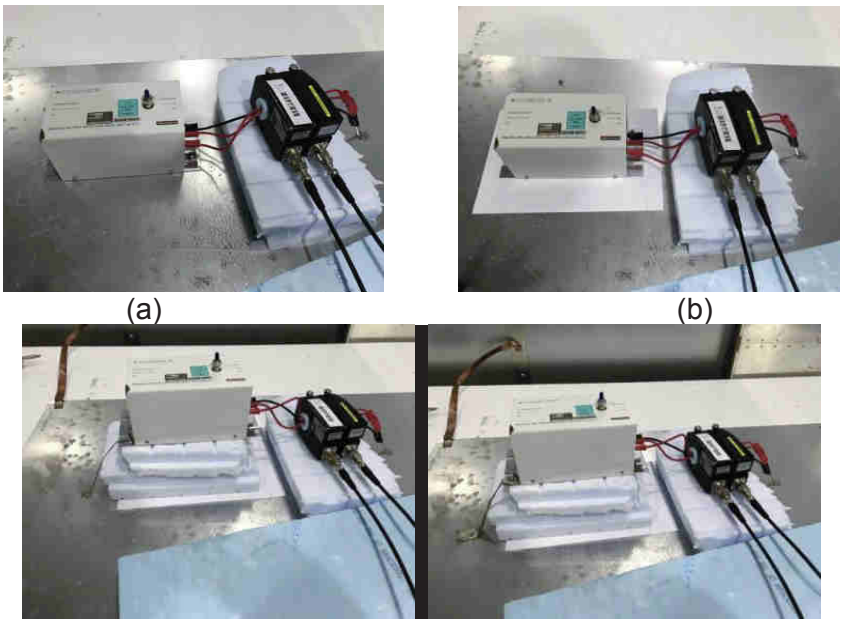

Fig 8. Conducted immunity grounding issue scenarios (a) reference setup, (b) very bad grounding with paper, (c) grounding with thin cables, (d) grounding with thick cables

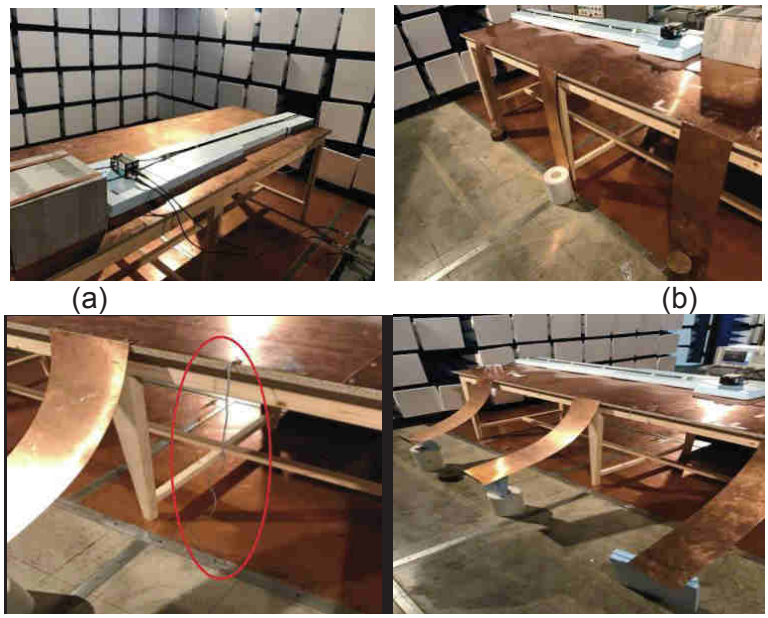

Fig 9.Test table grounding issue scenarios (a) reference setup (front view), (b) reference setup (rear view), (c) grounding with ordinary cable circled in red, (d) broken ground

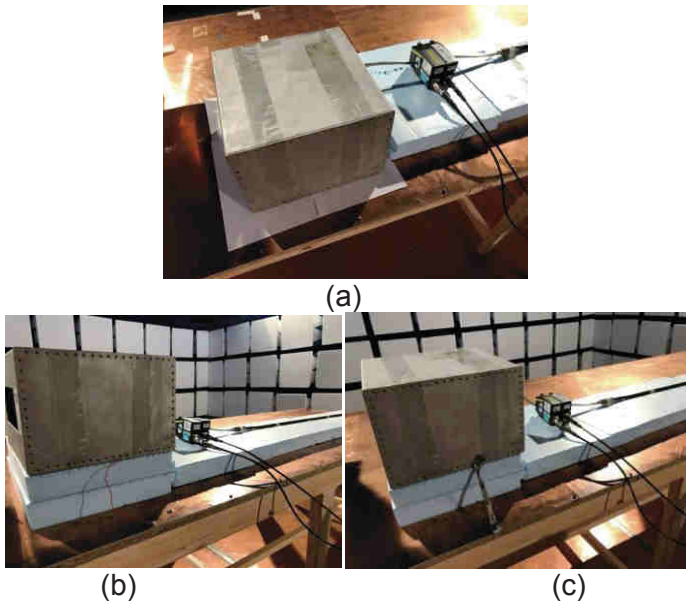

Fig 10. EUT grounding issue scenarios (a) very poor grounding with paper, (b) grounding with thin cable, (c) grounding with thick cable

In the third step of the research, we focused on the effects of possible issues with metallic tables used in some conducted immunity tests such as MIL-STD461 CS114 [3] tests, and automotive BCI testing. For example, in the CS114 test, the military EUT is placed on a metallic plate on the table and securely bonded to it. The metallic ground floor on the table is expected to have a surface resistance no greater than 0.1 milliohms per square. The DC resistance between the metallic ground plane and the shielded enclosure must be 2.5 milliohms or less. The metallic ground plane must be electrically bonded to the floor or wall of the basic shielded room structure at least once every 1 meter. The metallic bond straps must

be solid and maintain a five-to-one ratio or less in length to width. To investigate the possible effects of the failure to meet these requirements in CS114 tests, we installed a CS114 setup seen in Fig.9(a) by means of a piece of dummy EUT that is a metallic box with a coaxial connector on it, a coaxial cable that connects the EUT to the wall of the chamber and a metallic table that is connected to the chamber floor. Subsequently we formed a large loop that contains the dummy EUT, the coaxial cable, the shielded chamber and the metallic table along with its bond straps. While the reference setup was installed with this very well grounded table and the securely grounded dummy EUT as seen in Fig.9(a)-9(b), we formed the following issue scenarios in turn;

The metallic test table grounding issue scenarios;

- The bond straps are disconnected from the floor and the metallic surface of the table is connected to the chamber floor via an ordinary banana cable (see Fig.9(c))
- The grounding of the metallic surface of the table is completely broken (see Fig.9(d)).

The EUT grounding issue scenarios;

- The dummy EUT is placed on pieces of paper without grounding. (See Fig. 10(a))
- The dummy EUT is elevated by 10 cm from the metallic surface of the table and connected to the metallic surface with a weak and thin cable. (See Fig.10(b))
- The dummy EUT is elevated by 10 cm from the metallic surface of the table and connected to the metallic surface with a thick cable. (See Fig.10(c))

Finally, in the last step, we investigated discrepancies between the two versions of the civil immunity standard “IEC61000-4-6” in terms of the RF port termination style of decoupling CDNs as there is a major difference between the 1996 and 2008 versions of the standard. While RF ports of all decoupling CDNs are terminated with 50 Ω in the version 1996, only one of them is terminated with 50 Ω and all the others are left unterminated in the version 2008. To experimentally detect the effects of the difference in the termination style on test results, we firstly installed a conducted immunity setup by means of a piece of actual EUT as seen in Fig.11, which is a hygro-thermometer that was intentionally made EMC-susceptible by revision on it, and four CDNs.

(a) (b)

Fig 11. Conducted immunity test setup (a) general view, (b) close-up of CDNs

The first CDN was a M2 type and used for supplying the EUT with 220 VAC, 50 Hz and for the interference injection. The other three CDNs were decoupling CDNs each of which was connected to a CM point of the EUT to simulate an actual test setup. With this setup, we performed two tests in sequence as per the 1996 and 2008 versions of the standard respectively and the response of the EUT along with the injected current was recorded per chosen frequency at which the EUT was very susceptible. In the first test as per the 1996 version, the RF ports of all the decoupling CDNs were terminated with 50 Ω. In the succeeding test, while only one of the decoupling CDNs was terminated with 50 Ω, all the others were left unterminated as required by the version 2008. Before each test, the CM loop impedance measurement was carried out at the power input of the power CDN (M2 type) as seen in Fig.11(a). Thereafter, the loop impedance results were compared with each other and a link was sought between the response of the EUT and the impedance curves and ultimately the detected discrepancies between the two versions of the standard were emphasized.

c. Experimental results and discussions

The CM and DM impedance curves of the LISN system in the issue scenarios are given between Fig.12 and Fig.15. As seen in these figures, the CM reference curve starts from a value below 10 Ω and increases to 22 Ω as the LISNs become parallel to each other as shown in Fig.3(a) and one of the military LISNs has impedance of around 45 Ω. On the other hand, the DM reference impedance is around 90 Ω as the LISNs become serial as seen in Fig.3(b). In the first issue scenario in which one of the LISNs is internally defective, in Fig. 12, while the CM impedance of the LISN system is two times higher than the CM reference impedance, the DM impedance of the same issue scenario in Fig.12(b) is markedly higher than the DM reference impedance. Consequently, any LISN breakdown can be easily detected with the VNA just before a test. In the second issue scenario, when pieces of paper are placed under the LISNs, the grounding issue is remarkably detected for frequencies up to

10 MHz and the obtained curve settles on the reference curve beyond 10 MHz in CM as seen in Fig. 13(a). Similarly, in DM, the effect of the paper is also significantly detected. When the LISNs are elevated and grounded through ordinary thin and thick cables in turn, the CM impedance values seen in Fig.13(a) deviate from the reference curve especially beyond 10 MHz. The effect is more significant in the use of the thin grounding cables than the thick cables. In Fig.13(b) for DM, the effects of the thin and thick cables occur again beyond 10 MHz in a similar manner. Subsequently, all the grounding issues can be detected by the proposed just-before-test verification method using two current probes. The results of the termination-related issues are given in Fig.14. The curves here reveal that all the termination-related issues can be detected very easily just before a test in CM and DM. Finally for LISN issues, the impact of the grounding switch forgotten in the VDE position while intending to perform a test as per CISPR standards is presented in Fig.15. The curves in Fig.15 show that its tangible effects are detected only in CM but cannot be detected in DM.

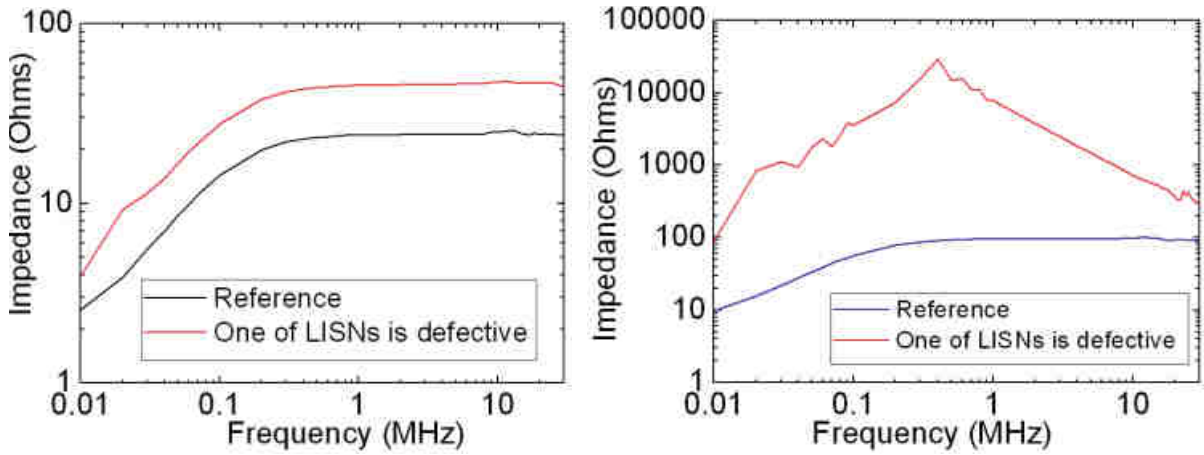

Fig 12. Results of the issue scenario in which one of the LISNs is internally defective (a) CM, (b) DM

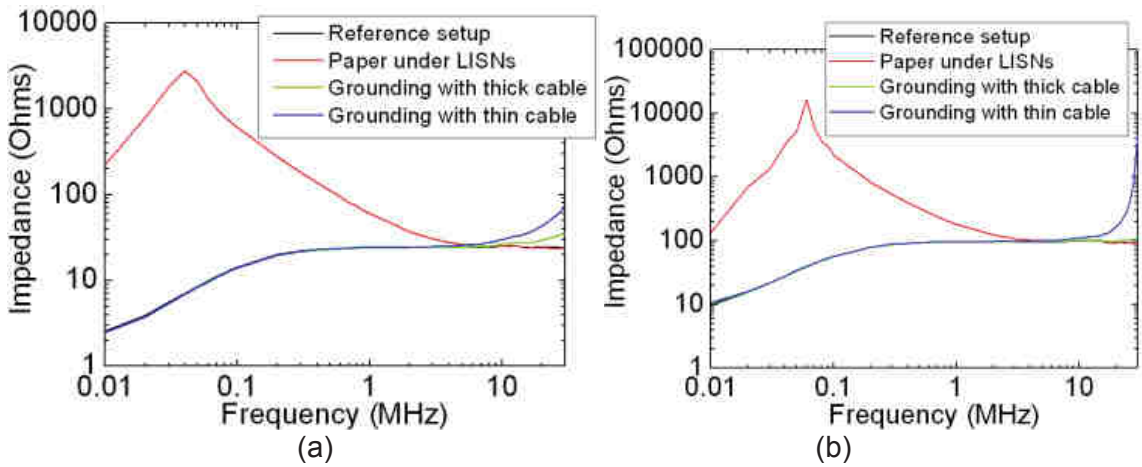

Fig 13. Results of LISN grounding-related issues (a) CM, (b) DM

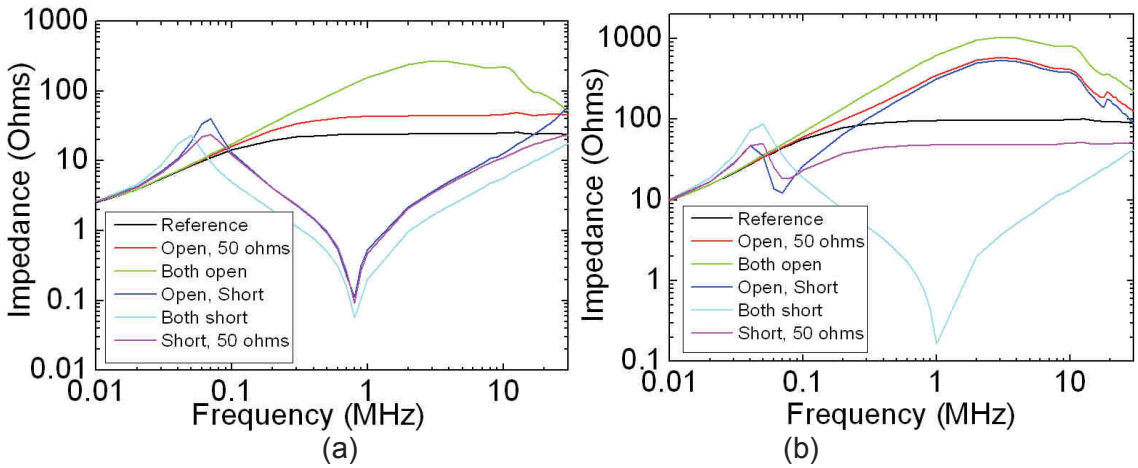

Fig 14. Results of termination-related issues (a) CM, (b) DM

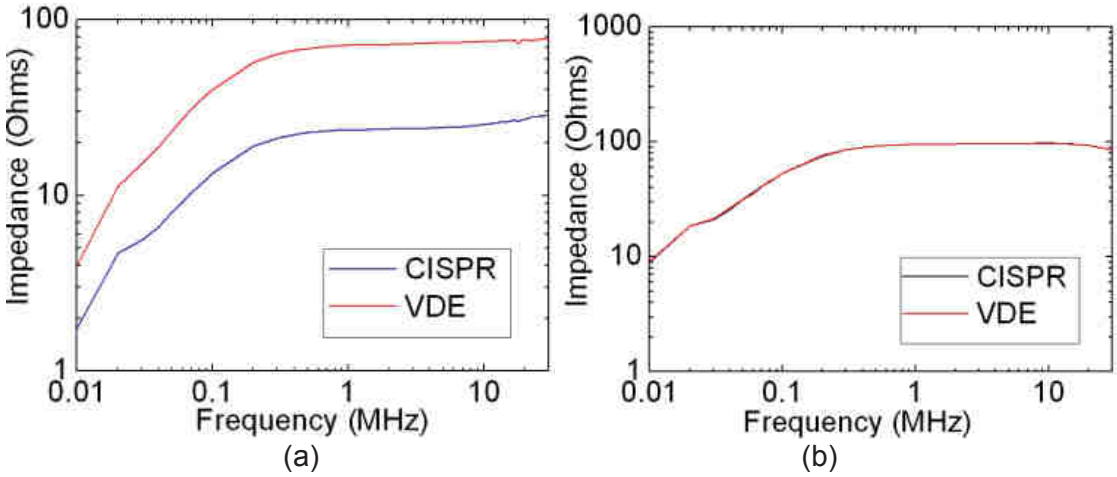

Fig 15. Results of the issue with CISPR/VDE Switch left in the VDE position (a) CM, (b) DM

The results of the CDN related issues are presented in Fig.16. As seen in Fig.16, while the reference loop impedance that includes the well grounded CDN is around 150 Ω, all the issue scenarios give remarkable deviations and they are easily detectable through the proposed verification method. Similarly the results of the test table and EUT grounding issue scenarios are given in Fig.17. Surprisingly, with the proposed method, the issues related to the table/EUT grounding can be detected and the deviations from the reference curve arise only for frequencies up to 100 MHz. Beyond 100 MHz, the issues cannot be detected through the proposed verification method.

Finally, the research results about the effects of the different versions of the IEC61000-4-6 standard are presented between Fig. 18 and Fig. 19. Fig.18 shows the loop impedance curves of the test setups that include the EUT, cables and CDNs for the two versions of the standard. As mentioned earlier, while all the decoupling CDNs are terminated with 50 Ω as per the 1996 version, only one of the decoupling CDNs is terminated with 50 Ω as per the 2008 version. The effects of the use of the different standard versions are clearly observed between 100 MHz and 150 MHz in terms of loop impedance. Due to the high scale of the

graph, it is not easily observable but there is also slight difference between the two curves of Fig.18 in the rest of the frequency range.

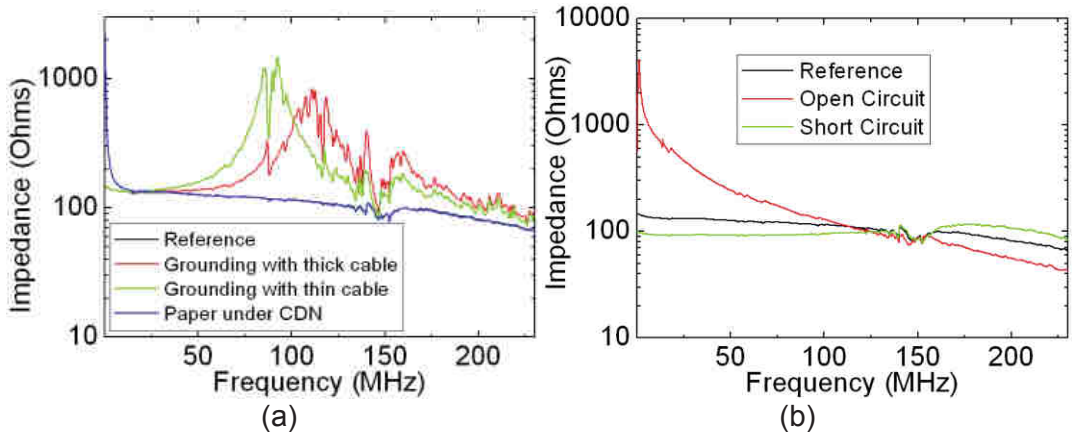

Fig 16. Results of CDN-related issues in CM (a) grounding issues, (b) termination issues

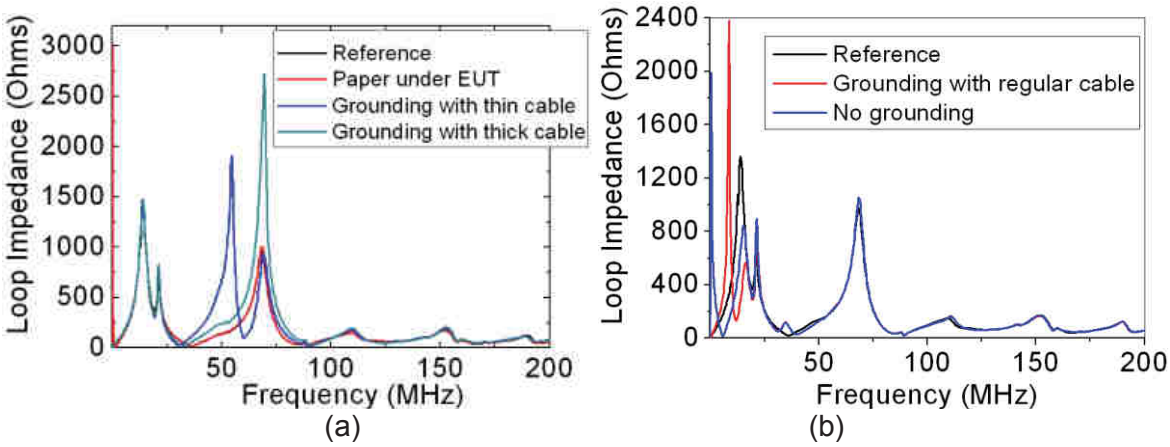

Fig 17. Results of EUT and table grounding issues (a) EUT, (b) table

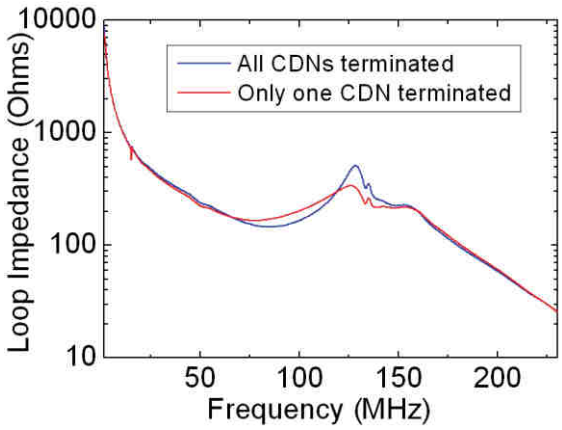

Fig 18. Results of comparison of two versions of IEC61000-4-6 in terms of loop impedance

As the EUT was intentionally made susceptible by modification, it notably responded to the frequencies in the ranges 70 MHz - 120 MHz and 150 MHz - 230 MHz. For that reason, we specially focused on these frequency ranges in the succeeding step of the research and investigated the response of the EUT in the tests as per both of the versions of the standard. In the Fig. 19, while the curves in (a) and (c) indicate the injected current into the test loops in both of the cases per frequency range, (b) and (d) show the EUT response which is the deviated value indicated on the EUT display due to the injected interference signal. All the curves in Fig.19 clearly reveal that different termination styles of the decoupling CDNs cause different injected currents and different EUT responses under the same injected calibrated power. In Fig 19. (b) and (d), while the displayed temperature is 37 degrees in the absence of interference, the deviations on the displayed value on the screen arise in a different manner in the different versions of the standard subsequently the failure to meet the specific requirements of each version may lead to different test results or wrong testing.

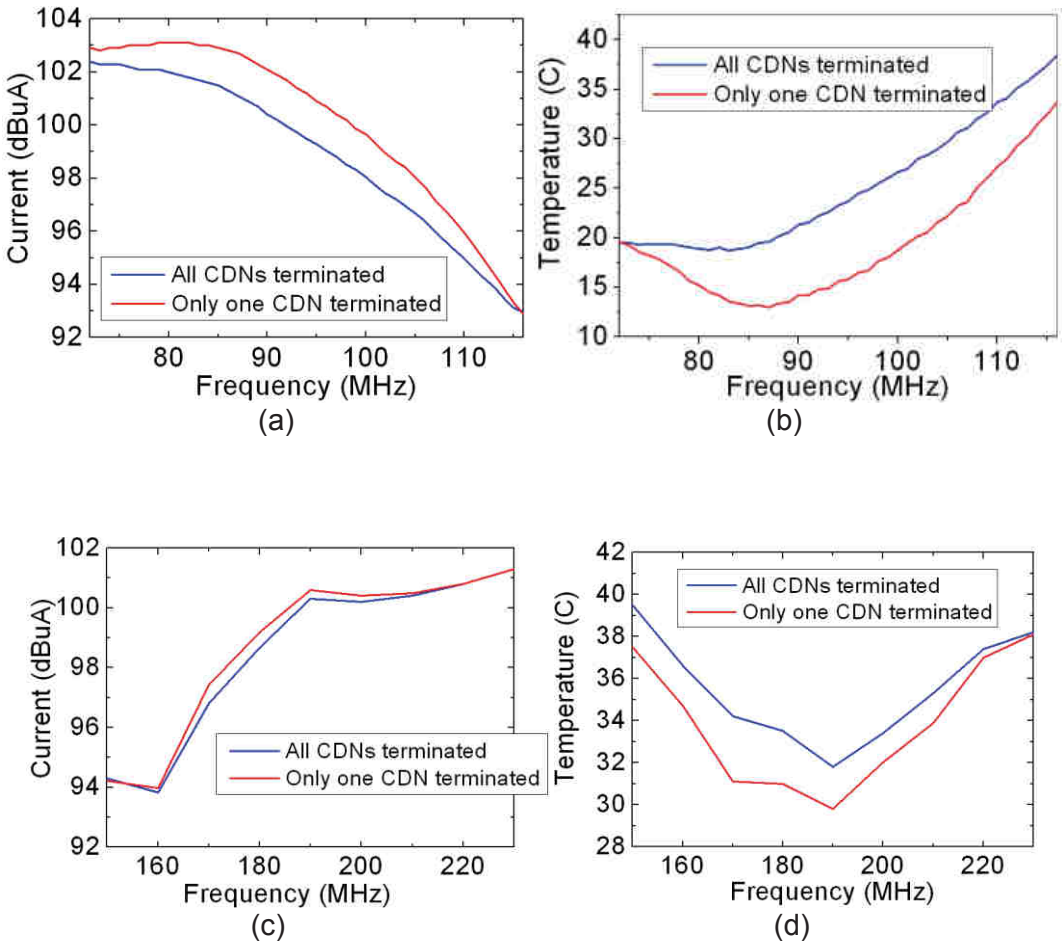

Fig 19. Results of comparison of two versions of IEC61000-4-6 in terms of injected current and EUT response (a) injected current between 70 MHz-120MHz, (b) EUT response between 70 MHz-120 MHz, (c) injected current between 150 MHz-230MHz, (d) EUT response between 150 MHz-230MHz

3. UPC research and results

a. Time-Domain Methodology

We propose fast methods that delay shortly the day-work at EMC test laboratories but at the same time are feasible to identify setup errors or defects on the used instrumentation [15] and [16]. Currently, many times the testing workbench is verified in different stages including several measurement and instrumentation. For instance, paths are evaluated employing instrumentation like vector network analyzers (VNA), which compared with equipment under test (EUT) measurements we are adding extra paths to the earth disabling us to identify grounding issue. Moreover, VNA is expensive instrumentation with sensitive input stages and usually are used without using high RF power at the verification stage to avoid instrumentation damage, meaning that the verification is done partially.

Otherwise, the receivers are evaluated directly connecting radio frequency generators and most of the times using continuous wave (CW) signals to verify the receivers although we know that it is essential to check the normative detectors such as the quasi-peak or the CISPR average. The issue of using CW waveforms as input signals is that they do not have a different response when the weighing detectors are employed, so usually, the normative detector is not verified. In this work, with the aim to overcome these limitations for the evaluation of the conducted emissions, novel approaches based on time-domain measurements and the use of arbitrary waveform generator (AWG) has been considered. Employing multi-toned waveforms and pulses to evaluate the instrumentation, Line Impedance Stabilisation Network (LISN), cables, loads and grounding conditions.

Nevertheless, if we get to focus on considering immunity testing like IEC 61000-4-6 [17], a method to rapidly evaluate all the test is necessary. Including the evaluation of the full chain; the generator, amplifier, power meter, directional coupler, paths and Coupling and Decoupling Networks (CDN). Obviously, this is not an easy task and many laboratories employ different measurement to verify this test, resulting in long procedures. Alternatively, test laboratories monitor the forward power, however, full verification of the test bench is incomplete and failures during the test can still occur. To overcome these deficiencies, in the work we propose a novel verification method based on time domain measurements, which allow us to use low-cost instrumentation as oscilloscopes to evaluate quickly the full chain of the conducted immunity test.

The methodology applied have some shared development between the conducted emissions and immunity test, however, it has been split into two different subsections to relate the procedure with the results section.

b. Measurement setup

Conducted emissions

As it has been stated at the introduction section, the goal of the just-before-test measurements is to be capable of evaluating the accuracy of the receiver according to the normative detectors, and at the same time to identify possible defects at the test bench. Including grounding failures or apparatus damage or erroneous correction factors. For this purpose, a method based on the use of AWG configuring a multi-tone or a representative EUT interference waveform will be used as the reference source in combination with the time-domain receiver. Although other types of instrumentation like frequency sweep can be used to perform the just-before-test evaluation, using time-domain instrumentation like oscilloscopes will improve the speed and capabilities of the methodology. Hence, the AWG is replacing the EUT and connected to the LISN, while the RF output of the LISN is connected to the time-domain EMI receiver, as it can be seen in the schematic diagram provided in Fig. 20.

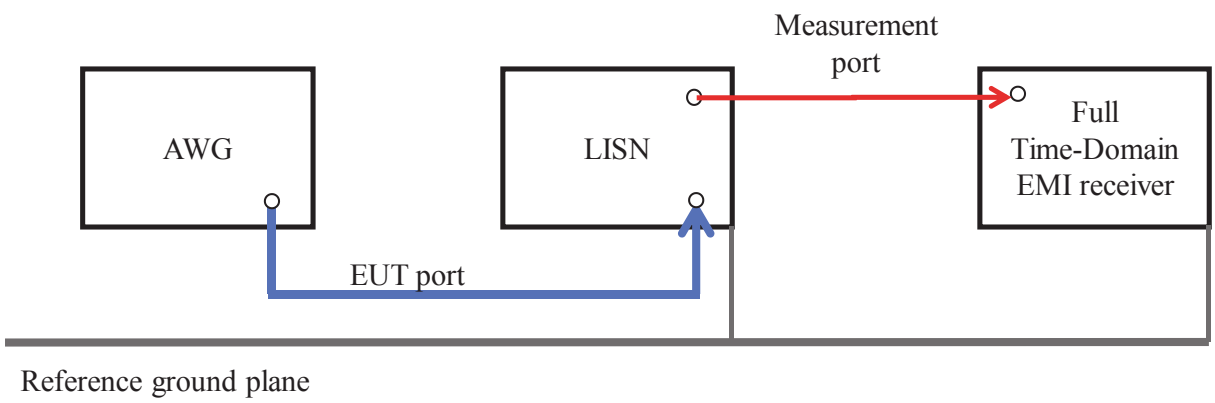

(a)

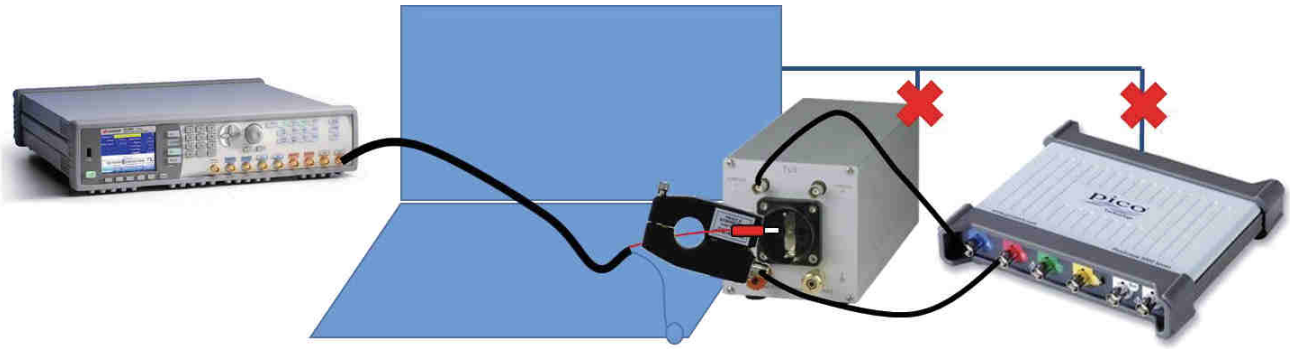

(b)

Fig 20. The just-before-test verification method for conducted emissions, (a) schematical depiction, (b) enhanced with photos

Arbitrary waveform generator (AWG) reference source

The reason to employ an AWG is that we can set the source according to our verification purpose, speeding up the procedure and at the same time focusing on the amplitude accuracy close to a desired limit line level [18]. The waveforms used in the results section are a multi-tone and a representative EUT interference. These signals will allow us to evaluate the full frequency band defined at CISPR standards with a single excitation. For instance, in this work, the work is focused on conducted emissions frequency band defined as Band B according to CISPR 16-1-1 standard.

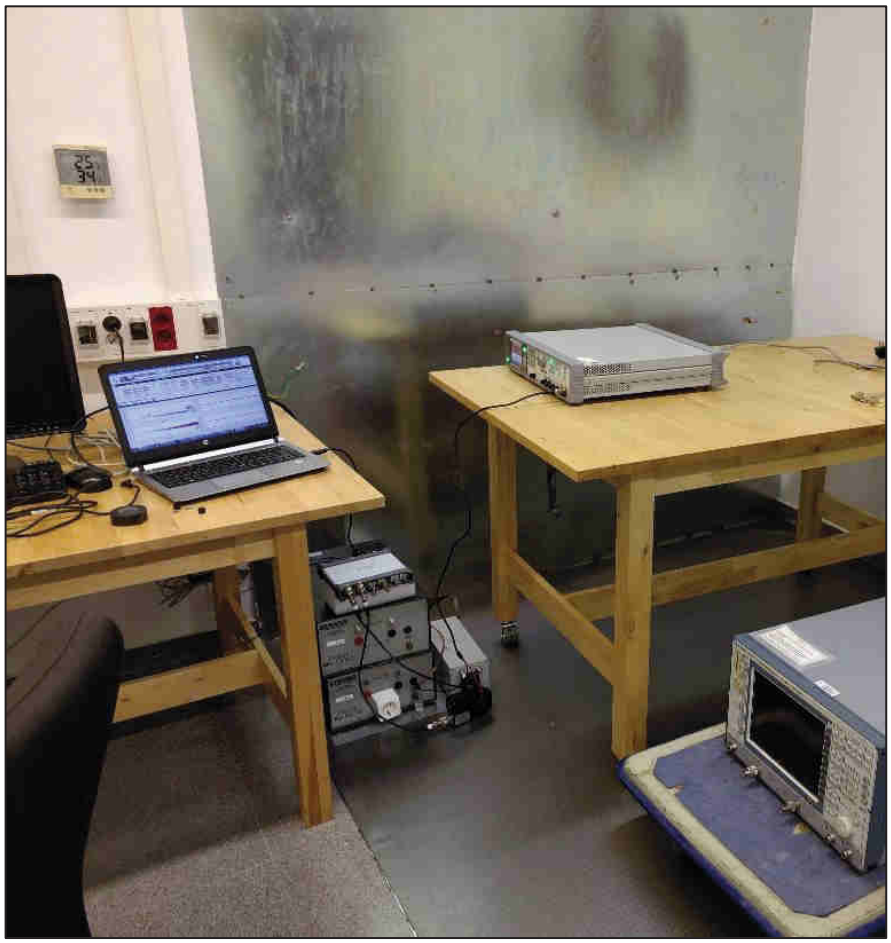

Fig 21. General measurement setup

Multi-tone signal

The first proposed waveform is a synthesized multi-tone signal as the excitation. The periodic signal x(t) is formed by superposition tones with arbitrary amplitude, frequencies and phases according to the following equation,

$$x(t) = \sum_{i=1}^{N_{tones}} A_i(f_i)\sin\left((2\pi f_i)t + \phi_i(f_i)\right) \qquad (1)$$

where Ai, fi and ϕi are, the amplitude, frequency, and phase of the i-th tone and Ntones is the number of tones generating the signal x(t). The independent control over the amplitude and phase of each tone enables us to control the crest factor in the time-domain [19]. The signal is sampled obtaining a time discrete signal x[n], where n=0,1,2… is the integer variable used as the time step index. In Fig. 22, we can find the computed spectrum from the calculated multi-tone x[n] signal. As it has been mentioned before, the goal of this just-before-test measurement is to evaluate the accuracy of the EMI measurement system close to the limit lines defined at the standards as it is the most critical amplitude for the verification. Therefore, it can be seen from 0, that the amplitudes of the tones are matching the limit amplitude for the quasi-peak detector defined at CISPR 32 standards for class B equipment.

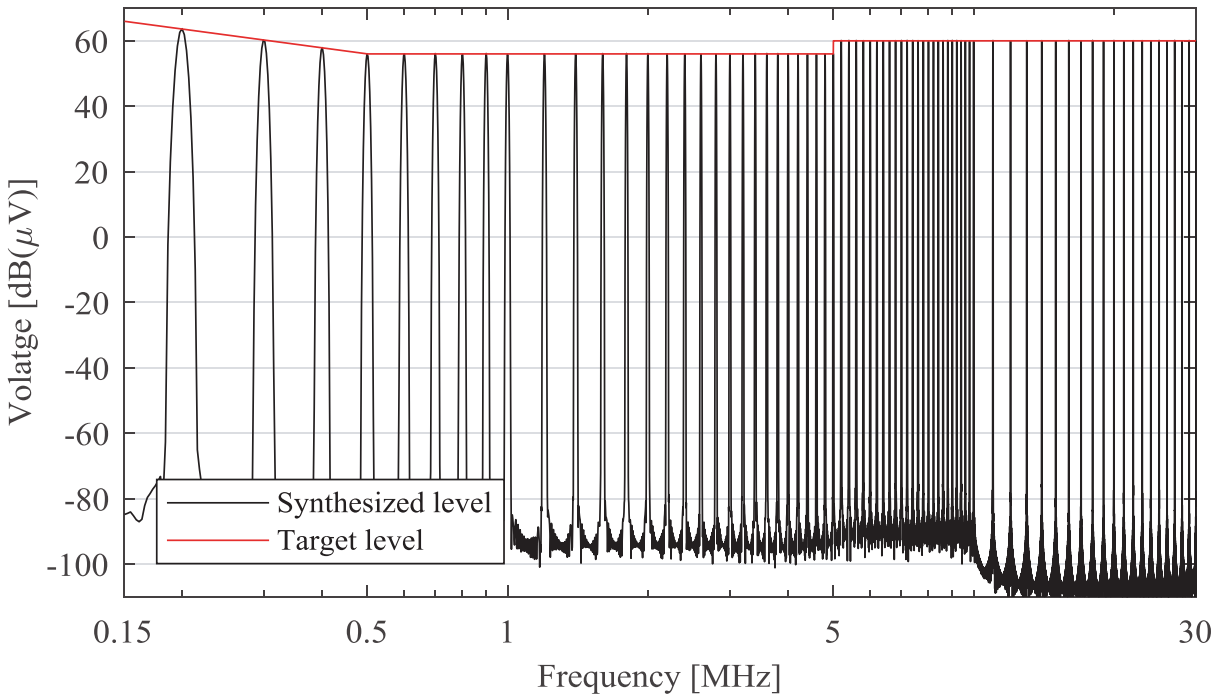

Fig 22. Spectrum of the multi-tone waveform generated to evaluate the conducted emission test according to CISPR 32

Representative EUT interference to evaluate the accuracy of weighting detectors

The other waveform proposed to perform the just-before-test verification for conducted emissions is a realistic excitation that can be commonly found at EUT. The purpose of this signal in comparison with the multi-tone waveform is to be capable of evaluating the different weighting detectors such us quasi-peak (QP) or average (AVG) defined in CISPR 16-1-1 [20]. This is very important as at the end the limits are defined with these detectors and not with the peak value in most of the common EMC standards. Moreover, with the representative interference, we are verifying that the test bench is performing accurately in

front of interferences that are suitable to be expected in terms of amplitude and frequency shape.

Regarding the signal generated to excite the AWG, it is composed of a pulsed signal with a frequency repetition of 1 kHz and a duration of 10 µs, which allows us to view differences with the different standard detectors. Moreover, the generated interference has also a ringing, which is a common phenomenon found at most of the measurements due to mismatch causes at the EUT design. This ringing is added with a Gaussian pulse waveform centered at 10 MHz with a bandwidth of 5 MHz.

Time-domain EMI measurement system

To verify the different tests with the just-before-test measurement we propose to use novel measurement systems like TEMPS [21] and [22]. This measurement method is based on acquiring the time-domain signal employing general-purpose oscilloscopes. Afterward, the spectral estimation is computed with a post-processing stage obtaining the equivalent resolution bandwidth and weighting detectors according to the CISPR 16-1-1 standard.

In each acquisition, we are obtaining the full spectrum limited by the bandwidth of the oscilloscope and the acquisition configuration, so we are observing all the frequency range at each capture. In addition, compared with frequency sweep instrumentation, we have other advantages like the multichannel capability, which allow us to measure two or four lines simultaneously for conducted emissions, depending on whether the mains is single or three phases. On the other hand, the cost of the instrumentation is lower compared with the use of instrumentation like VNA for just-before-test verification and the risk to damage it is minor as the input maximum voltage of the oscilloscope is of hundreds of volts compared to the few volts allowed by the VNA or a standard EMI receiver.

In Fig. 23, the basic schematic diagram of the time-domain systems is shown below.

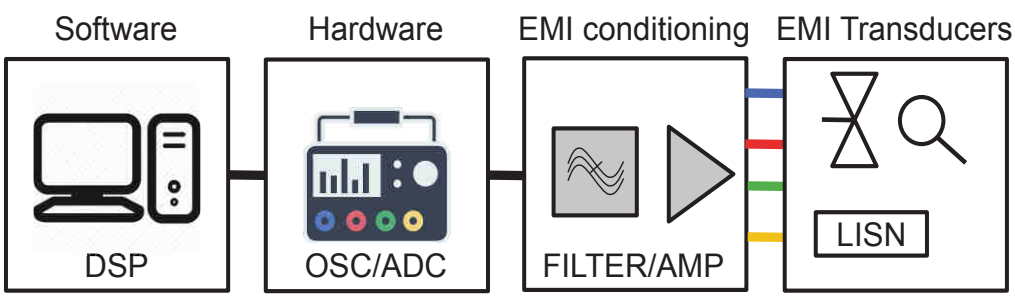

Fig 23. The basic schematic diagram of the time-domain system

Conducted immunity

For the conducted immunity verification, the methodology will be based on placing the time-domain EMI measuring system instead of the EUT. Employing the previously described TEMPS system based on the use of an oscilloscope. The TEMPS system software will be run in a laptop capturing constantly the signal with a max-hold option. In this way, the measurement system is obtaining captures for instance for the frequency range between 150 kHz and 80 MHz continuously and computing the spectrum. Once the just-before-test system is ready, we run the immunity test increasing the frequency step from 1% to 20%. This is done as it is more than sufficient for the verification purposes, as the failures commonly occur at broad ranges as it can be seen in the results section.

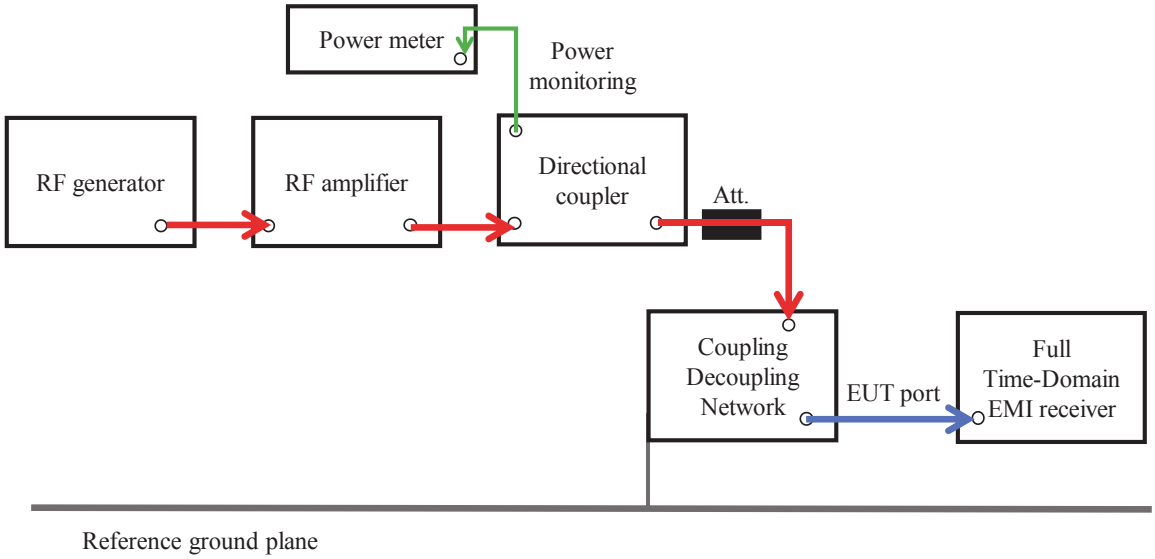

(a)

(b)

Fig 24. The just-before-test verification method for conducted immunity, (a) schematical depiction, (b) photo

The main advantage of this methodology is that we are evaluating the performance of the full chain. The generator, amplifier, paths, grounding and the coupling decoupling network. Therefore, if there is a failure in any of these items, the measurement of the voltage will not be in accordance with the calibrated test and failure can be reported by observing the deviation at each of the injected frequencies.

c. Time Domain Results

Conducted emissions just-before-test verification

With the aim to demonstrate the capabilities of the just-before-test verification methodology, different scenarios have been created. A test set-up according to CISPR 32 is evaluated when everything is perfectly setup or different failures have been intentionally created. Therefore, the just-before-test methodology developed should allow us to identify malfunction of the test bench due to grounding or damage problems with the LISN, coupling planes, the receiver cables, and terminations.

To generate the reference signals described in the previous section a Keysight AWG model 81160A is used at the conducted emissions test instead of the EUT. The AWG is connected through a coaxial cable to the LISN of the test bench and the lines are measured employing the TEMPS system. The system is composed by the post-processing software and a Picoscope oscilloscope model 5444B used to capture the time-domain signal. The measurement time has been set to 100 ms with a sampling rate of 250 MSamples/s.

Following, different measurements are presented when the test bench is working properly and when we create a delivered failure with the aim to observe if the just-before-test method is able to identify it. The first results shown in 0 are the results obtained for the multi-tone signal and the realistic interference when non-failure is introduced to the test set-up.

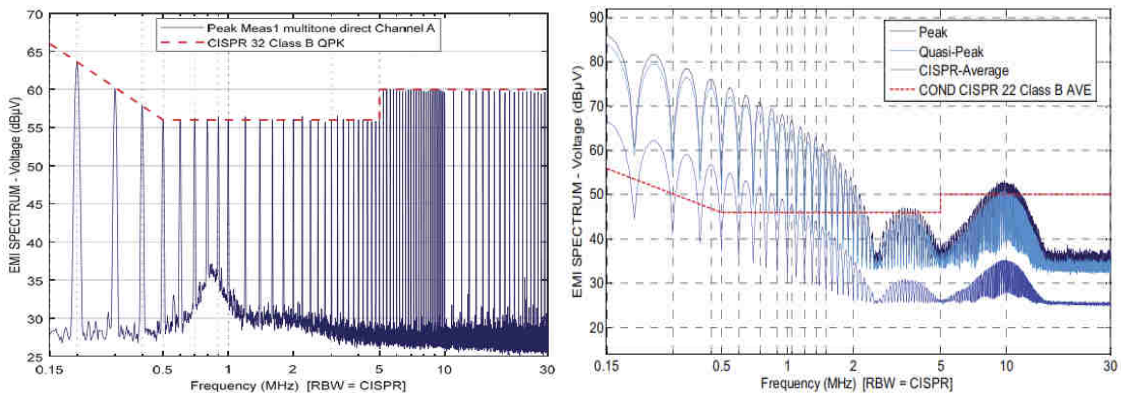

(a) (b)

Fig 25. Spectrum result when the multi-tone waveform is employed (a) and when the representative EUT interference is used (b)

From the results shown in Fig. 25 (a), we can see that the multi-tone signal is matching at each injected tone the level defined at CISPR 32 QP Class B limit line. Therefore, we can confirm that all the test bench is working properly when a non-failure situation is present. However, from this measurement, we cannot determine anything from the weighting detectors defined at the standards that at the end is the magnitude that we should compare with the standard. For this reason, we observe the realistic pulsed waveform generated by the AWG (Fig. 25 (b)), on this occasion we compute the peak the QP and the AVG detectors. If we consider that the pulse repetition rate of the interference is 1 kHz, we can verify at the curved provided at Figure J.11 at CISPR 16-1-1 standard that the QP result and the AVG result are according to the illustrative curve. At this curve it is described that a 3 dB reduction for the QP measurement and a 20 dB reduction for the AVG one should appear in reference to the PEAK measurement, as it is observed in 0(b)). Therefore, with these two measurements, we can ensure that the conducted emissions test bench for CISPR 32 standard is verified just before the test. Moreover, we have done these measurements with time-domain instrumentation and the total elapsed time to verify it is less than two minutes.

Following we produce deliverable failures and check the response of the just-before-test time-domain verification method. The first failure scenario that we are simulating is a poor grounding connection of the LISN to the ground plane. In this occasion, we perform three different measurements with the multi-tone waveform. The first one is the reference and the LISN is properly connected to the ground plane via several metallic plates and screws, the second one is done by means of a metallic mesh and the last one is using a thin wire. The results of these measurements are illustrated in Fig. 26.

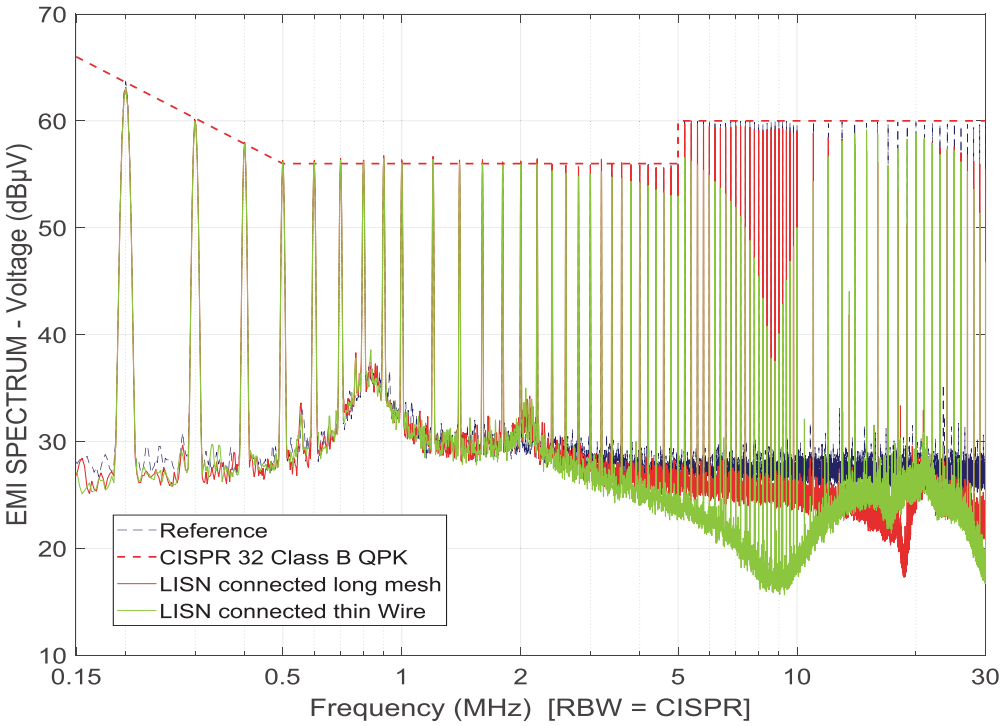

Fig 26. Results for the different LISN grounding conditions. In blue the reference measurement, in red when the connection is done through a thin wire and in green when it is done by means of a mesh.

From the results, we can clearly observe the differences that are produced above 2 MHz when the different grounding connections are used. The reference measurement is matching the limit line amplitudes, however, the long mesh and the thin wire are causing malfunction to the test bench. We can verify with the just-before-test measurement method that with the thin wire we have differences up to 20 dB at 8.5 MHz and 5 dB at 30 MHz with the mesh connection.

Hence, employing time-domain instrumentation in combination with the AWG, we are able to check if the entire test bench is working properly. The measurement time is less than 30 s and we are checking the instrumentation with the normative detectors, the paths, the coupling planes, the grounding, and the LISN.

Conducted immunity just-before-test verification

Similar to the conducted emissions, different cases have been evaluated with the just-before-test method developed for conducted immunity. We are able to identify failures at the CDN or injection clamp including damage, reverse placement or grounding failures. Additionally, we could evaluate the performance of the amplifier, RF generator, power meter, the path grounding and distance to the reference plane.

In this case, the TEMPS system is connected at the output of the EUT side of the CDN, emulating the EUT. The instrumentation employed to perform the just-before-test measurement is the same that has been used for the conducted emissions. As described before, the oscilloscope is placed instead of the EUT running TEMPS software, measuring continuously the RF with the max hold option. The oscilloscope employed is a Picoscope 5444B, which has a bandwidth of 200 MHz. Regarding the conducted immunity test, this is according to IEC 61000-4-6 standard. In order to perform the test, an R&S SML03 signal generator is employed in combination with BONN BSA 0110-100 Power Amplifier, an AR PM2002 power Meter, and a Schlöder M2+M3 CDN. For the verification purposes, the frequency range is set between 150 kHz and 80 MHz with a frequency step of 20 %, as it is sufficient to evaluate the performance of the test bench. The dwell time at each frequency is set to 0.5 s and the target RF voltage is set to 3 V. It is important to highlight that the time employed to perform the verification of the IEC 61000-4-6 is less than a minute, around 40 seconds.

The first scenario that we evaluate is when the test bench is working properly. The results can be observed in Fig. 27 in blue colour. The amplitude measured is 114 dBµV, which is the target amplitude divided by 6 as the load of the oscilloscope is set to 50 ohms. Otherwise, when we produce a failure scenario (see red line in Figure), where we place the CDN in reverse mode, the amplitude is not matching the theoretical value and the frequency response is not flat. In fact, in some frequencies, we are receiving 28 dB less than the expected value. Therefore, with the just-before-test verification method, we can identify this type of defect that would have been missed if we had used a VNA to check the paths or we had just been monitoring the forward and reverse power at the power meter.

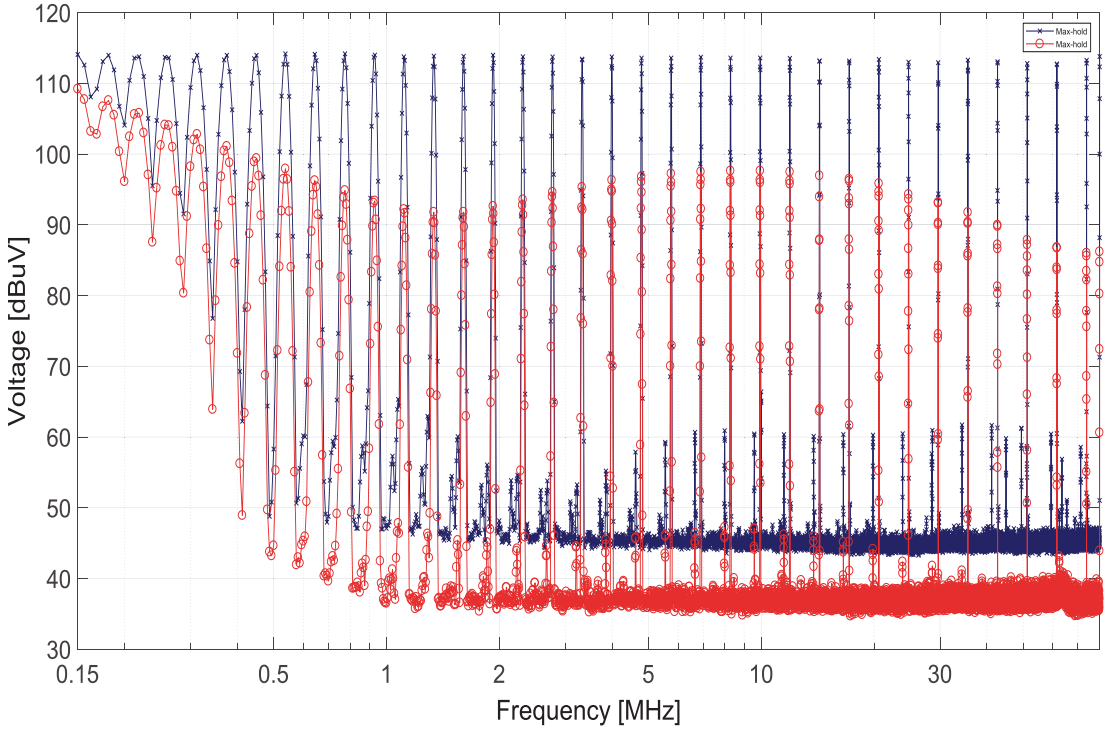

Fig 27. Results of the just-before-test verification method when the CDN is placed in reverse position (red colour) compared with the reference in blue.

The other scenario that we have simulated is the case in which the CDN is not properly connected to the reference ground plane. In this occasion, we have connected the CDN through a thin wire and we have disconnected the CDN from the ground plane using an isolation material of 5 mm. The results of this scenario are shown in Fig. 28, where the blue trace is the reference measurement, the green one is the result of the CDN connected using the thin wire and the red trace is the result of the CDN disconnected from the ground plane.

From the results, it is noticeable that the inadequate connection of the CDN produces a strong impact on the test. Having a higher influence at the lowest frequency range, where differences up to 34 dB can be found compared with the reference scenario. Therefore, it is crucial to ensure the correct grounding with all the available CDN surface. Otherwise, the just-before test methodology has been able to detect this failure on the connection.

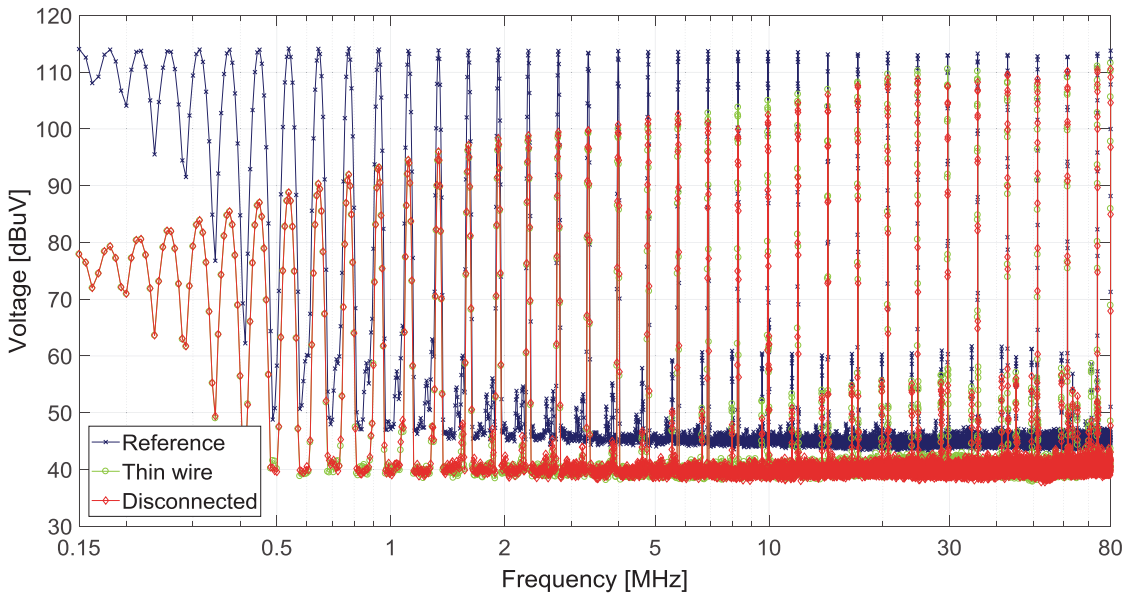

Fig 28. Results of the just-before-test verification method when the CDN is connected to the ground plane in a poor manner.

d. Conclusions

In this work, two different just-before-test methodologies have been developed to verify the proper functionality of the conducted emissions and immunity tests. Both of the methodologies are based on the use of time-domain measurement systems employing oscilloscopes at the acquisition stage, which allows us to verify the test in less than a minute for conducted immunity and in two minutes for conducted emissions. As it has been mentioned at the introduction section, the speed and ease of setup are critical for the daily use at the EMC test laboratories and both are accomplished with the proposed methodologies. Moreover, novel advantages are introduced by the use of controlled waveform generated by arbitrary waveform generators and the use of oscilloscopes for emissions and immunity tests. Regarding the arbitrary waveform, it allows us to evaluate the full chain of the emissions test including the weighting detectors and ensuring the accuracy of the measurement around the limit line defined at the standards. On the other hand, the employment of the oscilloscope at the immunity test allows us to evaluate the performance of the path, CDN and novelty the performance of the generator and the power amplifier.

At the results section, several experiments simulating failures have been evaluated with the goal to verify if the just-before-test method were able to identify the defective scenarios. In all the occasions the developed methodologies were functioning accurately and defects like grounding or reverse CDN connection have been detected. Therefore, the rapid and cheap methodologies have been validated in the experimental section and should be suitable to be implemented by EMC test laboratories as a new tool to be in compliance with the

requirements of test verification. A discussion might be if this type of verification methods should be included at the EMC standards, in order that all the test laboratories can apply them. Increasing the quality of the test laboratory and clearly identifying major failures like path or instrumentation damage or measurement accuracy problems just-before-test.

4. References

1- CISPR22, Information technology equipment –Radio disturbance characteristics – Limits and methods of measurement

2- CISPR11, Industrial, scientific and medical equipment – Radio-frequency disturbance characteristics – Limits and methods of measurement

3- “Requirements for the Control of Electromagnetic Interference Characteristics of Subsystems And Equipment”, Department of Defence USA, MIL-STD-461F-2007

4- EN 61000-4-6, Electromagnetic compatibility (EMC) - Part 4-6: Testing and measurement techniques - Immunity to conducted disturbances, induced by radio-frequency fields, 2008

5- EN 61000-4-6, Electromagnetic compatibility (EMC) - Part 4-6: Testing and measurement techniques - Immunity to conducted disturbances, induced by radio-frequency fields, 1996

6- ISO/IEC 17025:2005 General requirements for the competence of testing and calibration laboratories.

7- Tarateeraseth V., Bo Hu ; Kye Yak See, Canavero F.G., “Accurate Extraction of Noise Source Impedance of an SMPS Under Operating Conditions”, *IEEE Transactions on Power Electronics*, Vol. 21, No.1,pp. 111-117, Jan 2010.

8- S.Cakir, O.Sen, M.Cinar, M. Cetintas**,** “Alternative Conducted Emission Measurements for Industry”, EMC Europe 2014, Gothenburg, Sweden, pp. 1037-1042, 1-4 September 2014.

9- VDE 0877 Part 1, Measurement Of Radio Interference - Measurement Of Radio Interference Voltages, 1989

10- Tim Williams, Stan Baker, “Pitfalls and practice of UEC 61000-4-6”, DTI-NMSPU project R2, Online: http://www.elmac.co.uk/PNP_61000-4-6.pdf

11- ISO IEC, 17025 ed3.0: General requirements for the competence of testing and calibration laboratories. ISO/IEC, 2017.

12- E. Tas and F. Pythoud, "Design, Implementation, and Evaluation of Proficiency Testing in EMC Conducted Immunity," in IEEE Transactions on Electromagnetic Compatibility, vol. 59, no. 5, pp. 1433-1440, Oct. 2017.

13- E. Tas et al., "Proficiency testing for conducted immunity with a new round robin test device," 2016 International Symposium on Electromagnetic Compatibility - EMC EUROPE, Wroclaw, 2016, pp. 274-279.

14- 15RPT01 RFMicrowave. Improved microwave measurement capabilities will boost quality and confidence in advanced technologies. http://www.rfmw.cmi.cz/

15- O. Şen and S. Çakir, "Improved Just-Before-Test Verification Methods with VNA for Conducted EMC Tests," 2018 International Symposium on Electromagnetic Compatibility (EMC EUROPE), Amsterdam, 2018, pp. 488-493.

16- K. Sieczkarek and A. Mackowiak, "European intercomparison exercises - conducted, radiated emission and field verification for immunity tests," 2005 International Symposium on Electromagnetic Compatibility, 2005. EMC 2005., Chicago, IL, 2005, pp. 118-123 Vol. 1.

17- IEC, 61000-4-6 ed4.0: Electromagnetic compatibility (EMC) - Part 4-6: Testing and measurement techniques - Immunity to conducted disturbances, induced by radio-frequency fields. IEC, 2013

18- M. A. Azpúrua, M. Pous, J. A. Oliva, B. Pinter, M. Hudlička and F. Silva, "Waveform Approach for Assessing Conformity of CISPR 16-1-1 Measuring Receivers," in IEEE Transactions on Instrumentation and Measurement, vol. 67, no. 5, pp. 1187-1198, May 2018.

19- M. Friese, “Multitone signals with low crest factor,” IEEE Trans.Commun., vol. 45, no. 10, pp. 1338–1344, Oct. 1997.

20- IEC CISPR, 16-1-1 ed4.0: Specification for radio disturbance and immunity measuring apparatus and methods - Part 1-1: Radio disturbance and immunity measuring apparatus - Measuring apparatus. IEC, 2015.

21- M. A. Azpúrua, M. Pous, M. Femandez and F. Silva, "Dynamic Performance Evaluation of Full Time Domain EMI Measurement Systems," 2018 International Symposium on Electromagnetic Compatibility (EMC EUROPE), Amsterdam, 2018, pp. 561-566.

22- M. A. Azpúrua, J. A. Oliva, M. Pous and F. Silva, "Fast and automated verification of multi-channel full time-domain EMI measurement systems," 2017 IEEE International Instrumentation and Measurement Technology Conference (I2MTC), Turin, 2017, pp. 1-6